Instant Pot®

DUO NOVA™

3 QUART, 6 QUART, AND 8 QUART

Multi-Use Pressure Cooker

User Manual

Welcome
Important Safeguards
Getting Started
Pressure Cooking Basics
Cooking With the Duo Nova
Care & Cleaning
Troubleshooting
Warranty
Contact/Support Information

Table of Contents

Welcome 3

IMPORTANT SAFEGUARDS 4–9

Specifications 9

Getting Started 10–20

Initial Setup 10

Product, Parts and Accessories 11–12

Control Panel 13–14

Status Messages 15

Status Icons 16

Settings 17–19

Cleaning Before First Use 20

Pressure Cooking Basics 20–29

Pressure Control Features 21

Depressurizing the Cooker 27–28

Initial Test Run 29

Cooking with the Duo Nova 30

Pressure Cooking With the Duo Nova 30–36

Non-Pressure Cooking With the Duo Nova 37–44

Care & Cleaning 45–46

Troubleshooting 47–49

Warranty 50–51

Contact and Support Information 52

Welcome to the world of Instant cooking.

Thank you for welcoming us into your kitchen.

Having families ourselves, we developed the Instant Pot® Duo™ Nova Multi-Use Pressure Cookers to allow busy families and professionals alike to cook healthy, delicious meals more easily and in less time.

We have partnered with chefs, authors and bloggers to compile a collection of recipes that we hope you enjoy!

Happy cooking,

Robert J. Wang
Founder & Chief Innovation Officer

Download the Instant Pot App
- 1000+ Original Recipes
- New User Tips
- Getting Started Videos

Download on the App Store

GET IT ON Google Play

Find helpful how-to videos, download the app, or visit our recipe site.

IMPORTANT SAFEGUARDS

When using electrical appliances, basic safety precautions should always be followed:

1. READ THE GETTING STARTED GUIDE AND ALL INSTRUCTIONS, SAFEGUARDS, AND WARNINGS BEFORE OPERATING THE APPLIANCE. FAILURE TO FOLLOW THESE SAFEGUARDS AND INSTRUCTIONS MAY RESULT IN INJURY AND/OR PROPERTY DAMAGE.
2. Use only the Instant Pot® Duo Nova lid with the Instant Pot® Duo Nova pressure cooker. Using any other pressure cooker lids may cause injury and/or damage.
3. Always operate the appliance on a stable, non-combustible, level surface.
4. Do not use the appliance for anything other than its intended use. Failure to follow these instructions may result in injury or property damage.
5. For household use only. Do not use outdoors. Not for commercial use.
6. **⚠CAUTION** Do not place the appliance on or in close proximity to a hot gas or electric burner, or a heated oven. Heat from an external source will damage the appliance. Failure to follow these instructions may result in injury or property damage.
7. **⚠CAUTION** Do not use the appliance near water or flame. Keep out of direct sunlight. Failure to follow these instructions may result in injury or property damage.
8. **⚠CAUTION** Do not touch hot surfaces. Only use side handles for carrying or moving. Extreme caution must be used when moving the appliance containing hot liquids. Do not move the appliance when it is under pressure.
9. **⚠CAUTION** The cooker base contains electrical components. To avoid electrical shock, do not put liquid of any kind into cooker base , and do not immerse power cord, plug, or the appliance in water or other liquid. Do not rinse the appliance under tap.
10. **⚠CAUTION** Do not fill over "PC MAX – 2/3" as indicated on the inner pot. When cooking foods that expand during cooking such as rice or dried vegetables, do not fill the inner pot over "– 1/2" line. Overfilling may cause a risk of clogging the steam release pipe and developing excess pressure. Refer to the "Getting Started Guide."

⚠WARNING Read this manual carefully and completely, and retain for future reference. Failure to adhere to safety instructions may result in serious injury.

IMPORTANT SAFEGUARDS

11. **⚠WARNING** This appliance cooks under pressure. Failure to follow these instructions may result in burns, injury and/or property damage. Make certain the appliance is properly closed before operating.

12. When cooking meat with skin (e.g. sausage with casing), the skin can swell when heated. Do not pierce the skin while it is swollen; this could result in scalding injury.

13. **⚠CAUTION** When pressure cooking food with a doughy or thick texture, or a high fat/oil content, contents may splatter when opening the lid. Please follow recipe instructions for pressure release method. Refer to Depressuring the Cooker in this manual.

14. **⚠CAUTION** Before each use, check the steam release valve/handle, steam release pipe, anti-block shield and float valve for clogging. Refer to the "Getting Started Guide." Failure to do so may result in injury or property damage.

15. **⚠WARNING** Do not open the appliance until it has depressurized and all internal pressure has been released. If the float valve is still up and/or the lid is difficult to open, this indicates that the appliance is still pressurized – do not force it open. Any pressure in the appliance can be hazardous. Refer to the "Depressurizing the Cooker" in this manual for information on releasing pressure. Opening appliance while it is still pressurized may lead to sudden release of hot contents and may cause burns or other injuries.

16. Do not use this appliance for deep frying or pressure frying with oil.

17. Do not lean over or place your hands or face over the steam release valve/ handle or float valve when the appliance is in operation or has residual pressure. Do not touch the metal portion of the lid when the appliance is in operation; this could result in injury.

18. Do not cover or obstruct the steam release valve/handle and/or float valve with cloth or other objects. Obstructing the steam release valve/ handle and/or float valve can create a safety issue and may cause injury.

19. Turn the appliance off if steam escapes from the steam release valve/ handle and/or float valve in a steady stream for longer than 3 minutes. There may be residual pressure in the appliance. Allow the appliance to depressurize naturally or release all excess pressure before opening. For more information on how to release pressure, refer to "Troubleshooting" on page 47 of this guide.

⚠WARNING Read this manual carefully and completely, and retain for future reference. Failure to adhere to safety instructions may result in serious injury.

IMPORTANT SAFEGUARDS

20. Turn the appliance off if steam escapes from the sides of the lid and ensure sealing ring is properly installed. Refer to page 22 in this manual on how to check the sealing ring.

21. To disconnect, select Cancel, then remove plug from power source.

22. Unplug from the outlet when not in use, as well as before adding or removing parts or accessories, and before cleaning. To unplug, grasp the plug and pull from the outlet. Never pull from the power cord.

23. Regularly inspect the appliance and power cord. Do not operate the appliance if the power cord or plug is damaged, or after the appliance malfunctions or is dropped or damaged in any manner. For assistance, contact Customer Care at support@instantpot.com or 1-800-828-7280.

24. **⚠CAUTION** Do not let the power cord hang over edges of tables or counters, or touch hot surfaces or open flame, including the stovetop.

25. **⚠CAUTION** Spilled food can cause serious burns. A short power-supply cord is provided to reduce the hazards resulting from grabbing, entanglement and tripping.
    - Keep the appliance and cord away from children.
    - Never drape the power cord over edges of tables or counters.
    - Never use below-counter power outlets, and never use with an extension cord.

26. Intended for countertop use only. Keep the appliance on a stable, heat-resistant platform. Do not place on anything that may block the vents on the bottom of the appliance. Do not place on a hot stove.

27. **⚠CAUTION** Do not use any accessories or attachments not authorized by Instant Brands™ Inc. The use of attachments not recommended by the manufacturer, may cause a risk of injury, fire or electric shock.

28. **⚠CAUTION** Before inserting the inner pot into the appliance, clean the outer surface of the inner pot and the heating element located on the inner surface of the outer pot with a clean dry cloth. Ensure they are dry and free of food debris. Refer to "Care & Cleaning." Failure to do so may result in injury or property damage.

29. Do not attempt to repair, replace, or modify components of the

appliance, as this may cause electric shock, fire or injury, and will void the warranty.

30. Do not tamper with any of the safety mechanisms. Failure to follow these instructions may result in injury or property damage.

31. Do not use the appliance in electrical systems other than 120V/60Hz for North America. Do not use with power converters or adapters.

32. This appliance is NOT to be used by children or by persons with reduced physical, sensory, or mental capabilities. Close supervision is necessary when any appliance is used near children and these individuals. Children should not play with this appliance.

33. To reduce the risk of pressure leakage, cook only in an authorized stainless steel Instant Pot® Inner pot. DO NOT use the appliance without the removable inner pot installed.

34. To prevent personal injury and damage to the appliance, only replace the sealing ring with an authorized Instant Pot® sealing ring. Refer to the "Getting Started Guide."

35. The use of accessory attachments not recommended by the appliance manufacturer may cause injuries.

36. Proper maintenance is recommended after each use. Refer to "Care & Cleaning." Let the appliance cool to room temperature before cleaning or storage.

37. Never connect this appliance to an external timer switch or separate remote-control system.

38. **⚠CAUTION** DO NOT touch accessories during or immediately after cooking. To avoid personal injury,
    - Always use oven mitts when removing accessories, and to handle the inner pot.
    - Always place hot accessories on a heat resistant surface or cooking plate.
    - Use extreme caution when disposing of hot grease.

    Failure to follow these instructions may result in injury or property damage

39. Do not leave the appliance unattended while in use.

⚠WARNING Read this manual carefully and completely, and retain for future reference. Failure to adhere to safety instructions may result in serious injury.

IMPORTANT SAFEGUARDS

40. **⚠CAUTION** Extreme caution must be used when the inner pot contains hot oil, hot food, or hot liquids. Improper use, including moving the cooker base, may result in personal injury. Do not move the appliance while it is in use.
41. Oversized foods and/or metal utensils must not be inserted into the inner pot as they may cause risk of fire and/or personal injury.
42. Do not store any materials in the cooker base or inner pot when not in use.
43. Do not place any combustible materials in the cooker base or inner pot, such as paper, cardboard, plastic, Styrofoam or wood.
44. Do not use the included accessories in a microwave, toaster oven, convection or conventional oven, or on a ceramic cooktop, electric coil, gas range, or outdoor grill.
45. The removable inner pot can be extremely heavy when full of ingredients. Care should be taken when lifting the inner pot from the cooker base to avoid burn injury.
46. **⚠CAUTION** Use caution when removing the lid. Heat and steam escapes as soon as the lid is removed. Never place your face, hands or exposed skin over the appliance opening where heat and steam escapes when removing the lid.

SAVE THESE INSTRUCTIONS.

⚠WARNING Read this manual carefully and completely, and retain for future reference. Failure to adhere to safety instructions may result in serious injury.

IMPORTANT SAFEGUARDS

⚠ WARNING

To avoid injury, read and understand instruction manual before using this appliance. Failure to do so may result in injury.

⚠ WARNING

Electrical shock hazard. Use grounded outlet only. DO NOT remove ground. DO NOT use an adapter. DO NOT use an extension cord. Failure to follow instructions can cause electric shock or death.

⚠ WARNING

THE FAILURE TO FOLLOW ANY OF THE IMPORTANT SAFEGUARDS AND THE IMPORTANT INSTRUCTIONS FOR SAFE USE IS A MISUSE OF YOUR APPLIANCE THAT CAN VOID YOUR WARRANTY AND CREATE THE RISK OF SERIOUS INJURY.

Special Cord Set Instructions

As per UL safety requirements, a short power supply cord (0.6 m to 0.9 m / 24" to 35") is provided to reduce the hazards resulting from grabbing, entanglement and tripping.

This appliance has a 3-prong grounding plug. To reduce the risk of electric shock, plug the power cord into a grounded (earthed) electrical outlet that is easily accessible.

Product Specifications

Duo Nova Mini	3 Quarts / 2.8 Litres	120 V~60 Hz	700 W	8.8 lb / 3.99 kg	11.5" × 10.2" × 11" 29.2 cm × 25.9 cm × 27.9 cm
Duo Nova 60	6 Quarts / 5.7 Litres	120 V~60 Hz	1000 W	11.8 lb / 5.37 kg	13.2" × 12.2" × 12.5" 33.5 cm × 31 cm × 31.7 cm
Duo Nova 80	8 Quarts / 7.6 Litres	120 V~60 Hz	1200 W	15.6 lb / 7.08 kg	14.8" × 13.6" × 14" 37.6 cm × 34.3 cm × 36.8 cm

⚠ WARNING

Read this manual carefully and completely, and retain for future reference. Failure to adhere to safety instructions may result in serious injury.

Initial Setup

- Read all of the Important Safeguards in this User Manual before using the appliance. Failure to read and follow Important Safeguards may result in damage to the appliance, property damage or personal injury.
- Use only the Instant Pot® Duo Nova lid with the Instant Pot® Duo Nova pressure cooker. Using any other pressure cooker lids may cause injury and/or damage.
- Remove all packaging material and accessories from within and around the appliance.
- Follow Care & Cleaning instructions in this manual to clean the appliance before first use.
- Place the appliance on a stable, level surface, away from combustible material and external heat sources. Do not place the appliance on a stovetop.
- Do not place anything on top of the appliance.
- Do not block the pressure control mechanisms located on the appliance lid.

Product, Parts & Accessories

Top of Lid

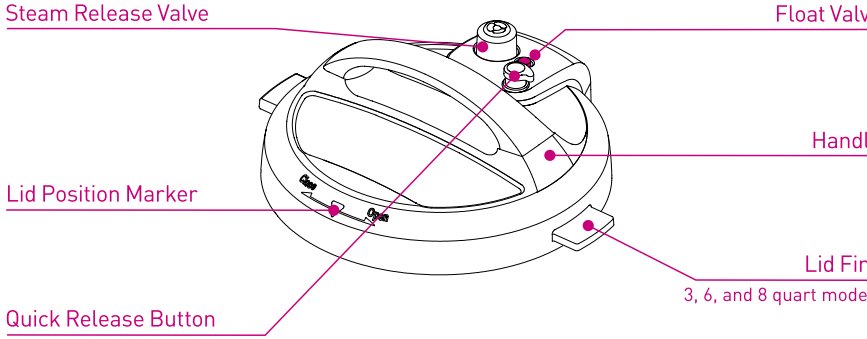

Underside of Lid

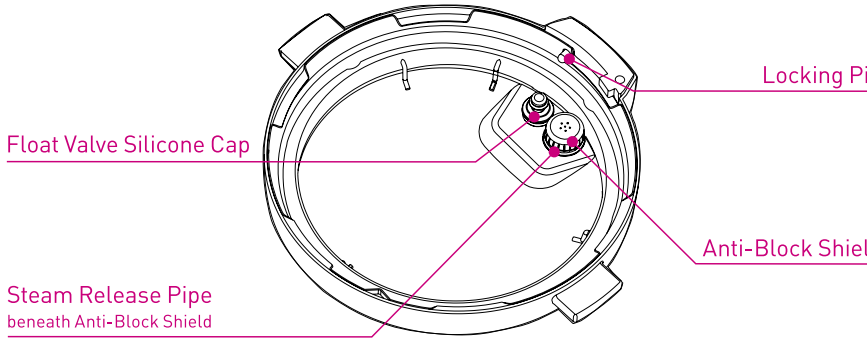

Note: *Illustrations are for reference only and may differ from the actual appliance.*

Product, Parts & Accessories

Inner Pot

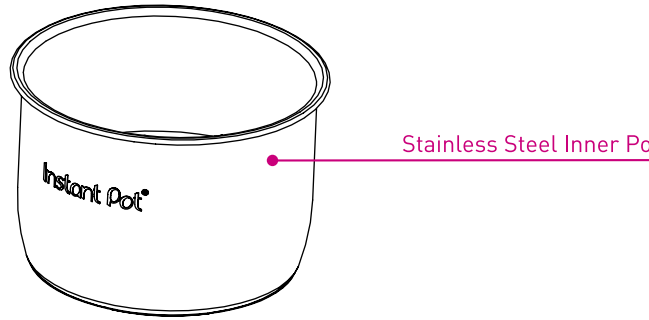

Cooker Base

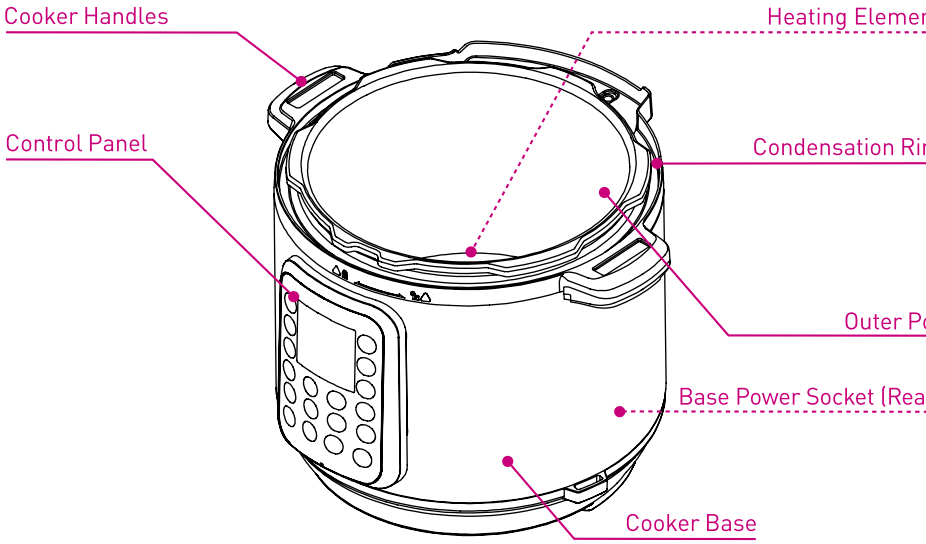

Note: *Illustrations are for reference only and may differ from the actual appliance.*

Control Panel

Duo Nova Multi-Use Pressure Cookers feature an intuitive control panel with LED display to help make cooking fast and easy.

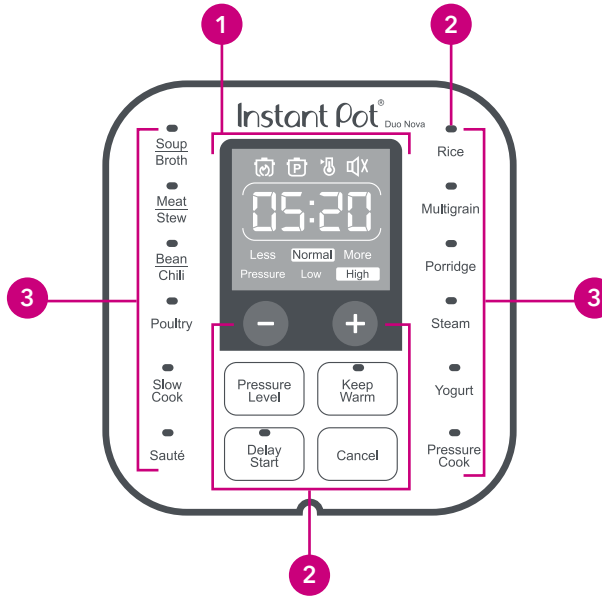

1 Display

Status Icons show cooker status as described in "Status Indicators," below.

Timer/Readout shows countdown to **Delay Start**, cooking time remaining, and **Keep Warm** time passed in hours and minutes. Also shows certain "Status Messages" as described below.

Less – Normal – More indicate the selected Smart Program cooking time or temperature.

Pressure Level Indicator shows the selected Smart Program pressure level.

2 Smart Program Settings Keys

–/+ keys – adjust **Delay Start**, cooking and **Keep Warm** times.

Pressure Level – toggles between **Low** and **High** pressure levels.

Keep Warm – turns the **Keep Warm** option on or off.

Control Panel

Delay Start – enables the delayed start option.

LED Indicators show the selected or active Smart Program including any options selected.

Cancel – Press cancel at any time to return the cooker to Standby mode.

See "Settings," below for more information.

3 Smart Programs

Pressure Cooking
Soup/Broth
Meat/Stew
Bean/Chili
Poultry (not available on Duo Nova 3 Quart models)
Rice
Multigrain (not available on Duo Nova 3 Quart models)
Porridge
Steam
Pressure Cook

Non-Pressure Cooking
Slow Cook
Sauté
Yogurt
Keep Warm

Status Messages

OFF	[**OFF**] indicates that the cooker is in Standby mode.
Lid	[**Lid**] indicates that the cooker lid is not properly secured.
On	[**On**] indicates that the cooker is preheating.
Auto	[**Auto**] indicates that the Rice Smart Program is running.
boiL	[**boiL**] indicates that the Yogurt Smart Program is in the process of pasteurizing milk (i.e., the Yogurt Smart Program is set to More).
Hot	[**Hot**] indicates that the Sauté Smart Program has reached cooking temperature and food may be added to the inner pot.
00:00	[**HH:MM**] displays one of the following: • When Delay Start is selected, displays a countdown until the Smart Program begins; • When a Smart Program is running, displays the cooking time remaining in that Smart Program; • When Keep Warm is selected, displays the length of time that food has been warming.
End	[**End**] indicates that a Smart Program has ended.
Food Burn	[**Food Burn**] indicates that the cooker is overheating due to insufficient liquid. See "Troubleshooting" for more information.
C:*	[**C***] indicates that an error has occurred. See "Troubleshooting" for more information on error codes.

Status Icons

Illuminated when the heating element is active, e.g., during preheating mode and when heat is being applied during cooking.

Illuminated when the cooker is using a pressure cooking program.

Illuminated when Keep Warm is in progress.

Illuminated when cooker sounds are turned off.

Note: *Audible safety alerts (beeps) cannot be turned off.*

Pressure Cook Illuminated to indicate the Smart Program selected or running.

Settings

Pressure Cooking Smart Programs

Adjusting and Saving Pressure Levels

Select a pressure cooking Smart Program and press **Pressure Level** to toggle between "**Low**" and "**High**" pressure settings.

When cooking begins, the setting will be saved and remembered the next time the Smart Program is selected.

Tip: *Higher pressures create higher cooking temperatures.*

Adjust and Save Pressure Cooking Smart Program Cooking Time

Select a pressure cooking Smart Program and press the Smart Program key again to toggle through the "**Less**," "**Normal**" and "**More**" cooking time settings. View the cooking programs options on page 36.

When cooking begins, the setting will be saved and remembered the next time the Smart Program is selected.

Delay Start

With a Smart Program selected, press **Delay Start** to activate the delay hours. Press "**–/+**" to adjust.

Press **Delay Start** again to activate the delay minutes. Press "**–/+**" to adjust.

Delay start will activate after 10 seconds and start counting down.

Delay start can be set to a minimum of 10 minutes or maximum of 24 hours.

Keep Warm

With a Smart Program selected, press **Keep Warm** to toggle ON or OFF. The **Keep Warm** light will be illuminated when set to ON. **Keep Warm** will start automatically after the Smart Program ends and continue until **Cancel** is pressed or the cooker lid is removed.

Settings

Non-Pressure Cooking Smart Programs

Adjust and Save Non-Pressure Cooking Temperatures

Select a non-pressure cooking Smart Program and press the Smart Program again to toggle through the "**Less**," "**Normal**" and "**More**" cooking temperature settings.

When cooking begins, the setting will be saved and remembered the next time the Smart Program is selected.

Adjust and Save Non-Pressure Cooking Time

Select a non-pressure cooking Smart Program and press "**–/+**" to adjust cooking time. Cooking time adjustments made while cooking is in progress will apply to the current cooking session only and will not be saved.

Delay Start

With a Smart Program selected, press **Delay Start** to activate the delay hours. Press "**–/+**" to adjust.

Press **Delay Start** again to activate the delay minutes. Press "**–/+**" to adjust.

Note: *Delay Start is not available with the Sauté or Yogurt Smart Programs.*

Keep Warm

With a Smart Program selected, press **Keep Warm** to toggle ON and OFF.

Note: *Keep Warm is not available with the Sauté or Yogurt Smart Programs.*

Resetting Smart Programs to Factory Default Settings

Resetting Individual Smart Programs

With the cooker in Standby mode (Display reads "**Off**"), press and hold the Smart Program control you wish to reset to factory default for 10 seconds. The Smart Program pressure level, cooking time and temperature settings will be restored to the factory defaults.

Reset All Time and Temperature Settings

With the cooker in Standby mode (Display reads "**Off**"), press and hold **Cancel** for 10 seconds. All Smart Program pressure levels, cooking times and temperatures will be restored to the factory defaults.

Turn Sounds On and Off

Cooker sounds are ON by default. With the appliance in Standby mode (Display reads "**Off**"), press and hold the "**–**" for 5 seconds to turn all sounds except error alerts OFF. The 🔇 status indicator will be illuminated. Press and hold the "**+**" for 5 seconds to turn all sounds ON. The 🔇 status indicator will be extinguished.

Cleaning Before First Use

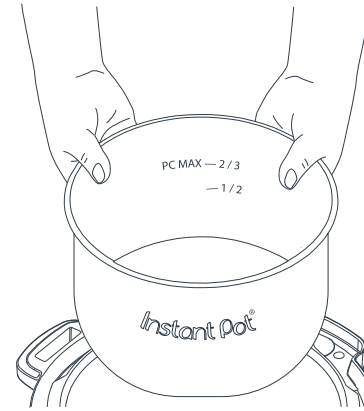

1. Remove the inner pot from the cooker and wash with hot water and dish soap.

   Note: *the inner pot is dishwasher safe.*

2. Inspect inner pot for deformations or damage.

   Note: *To avoid personal injury or damage to the appliance, replace a deformed or damaged inner pot. Use only authorized Instant Pot inner pots in your cooker.*

3. Rinse and dry the inner pot before returning it to the cooker.

4. Wipe the heating element with a dry cloth to ensure that it is dry and free of food particles. Failure to do so may result in personal injury or damage to the appliance.

⚠CAUTION	To avoid risk of personal injury and/or property damage, do not pour food or liquid into cooker base.

⚠WARNING	Do not fill the inner pot higher than the PC MAX — 2/3 line (Pressure Cooking Maximum), as indicated on the inner pot. Exercise extreme caution when cooking and venting food such as applesauce, cranberries, pearl barley, oatmeal, split peas, noodles, etc., as these foods may foam, froth, or spatter, and may clog the steam release pipe and/or steam release valve. Do not fill the inner pot higher than the —1/2 line when cooking these foods.

Pressure Control Features

Locking Lid

Place the lid on the cooker with the ◄▼► on the lid aligned with the 🔓▲ on the cooker base.

To lock the lid and seal the cooker, turn the lid clockwise until the ◄▼► is aligned with the 🔒▲ on the cooker base.

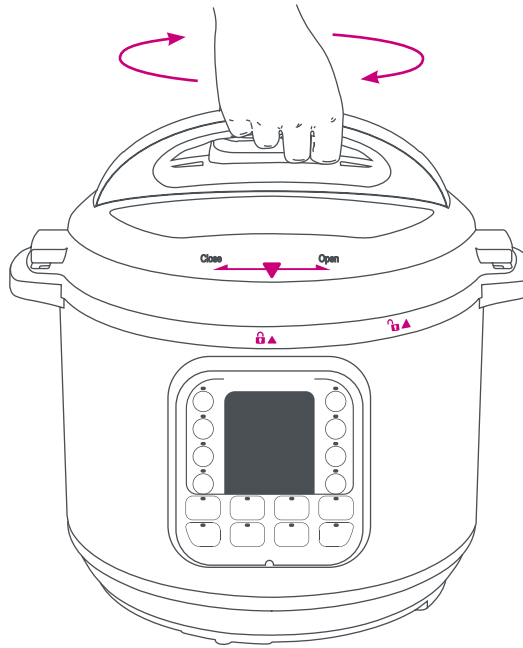

Pressure Control Features

Sealing Ring

The sealing ring installed on the underside of the lid creates an air-tight seal between the lid and the cooker.

Remove the sealing ring by pulling it gently off of the circular, stainless steel sealing rack attached to the underside of the cooker lid.

Clean and inspect the sealing ring for deformation or damage after each use.

Reinstall by gently pressing the sealing ring over the sealing ring rack. Ensure that the sealing ring rack sits snugly within the groove in the sealing ring.

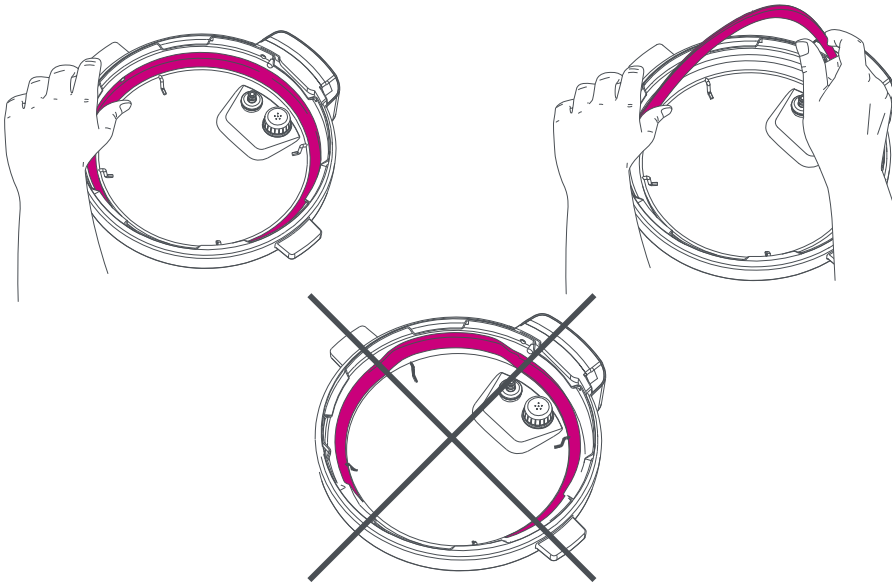

Notes: *Two sealing rings are included with the cooker. Use one for sweet dishes and one for savory dishes.*
Only one sealing ring should be installed in the lid when using the cooker.
Replace the sealing ring(s) every 12 months or when the sealing ring becomes deformed or damaged.

⚠CAUTION Always check for cuts or deformations in sealing ring prior to cooking. Only use authorized Instant Pot® sealing rings. Failure to follow these instructions may cause food to discharge, which may lead to personal injury or property damage.

⚠CAUTION Sealing rings may stretch over time. Do not use a stretched or damaged sealing ring. If puckering occurs, replace sealing ring.

Pressure Control Features

Quick Release Button

When the cooker lid is locked, the Quick Release Button is automatically set to the sealed (up) position, sealing the cooker and allowing pressure to build. (The Float Valve will pop up when the cooker is pressurized.)

Release pressure by pressing down on the Quick Release Button to open the Steam Release Valve.

Close the Steam Release Valve by turning the Quick Release Button counter-clockwise until it pops up into the sealed position.

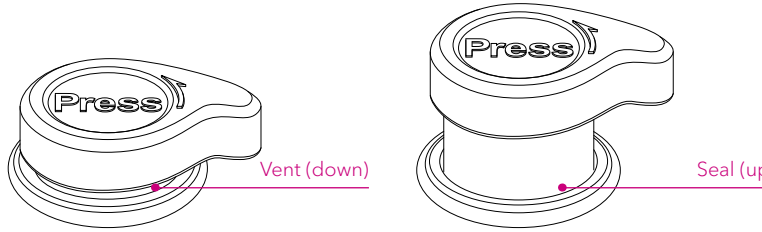

Float Valve

The Float Valve provides a visual indication of the pressure within the cooker.

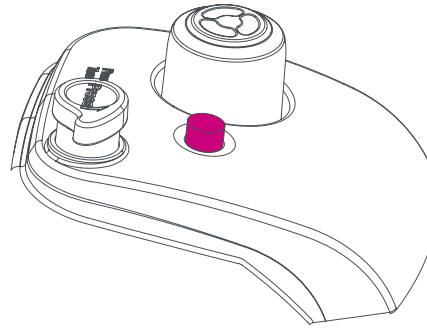

When the Float Valve is up, the cooker is pressurized.

Clean and inspect the Float Valve after each use.

⚠CAUTION All pressure must be released and float value must be down. Failure to follow these instructions could result in property damage and/or personal injury.

Pressure Control Features

Remove the Float Valve by pulling the Float Valve Silicone Cap off the Float Valve pipe (on the underside of the lid) and removing the float valve from top of lid.

Reinstall the Float Valve by inserting it pipe-first into float valve hole in the top of the lid. Hold it in that position while firmly pressing the silicone cap on to the valve pipe protruding from the underside of the lid.

Do not attempt to operate the pressure cooker without the float valve or silicone cap properly installed in the cooker lid.

Steam Release Valve

The Steam Release Valve (located in the top of the lid) opens to allow the release of pressure within the cooker when the Quick Release Button is pressed.

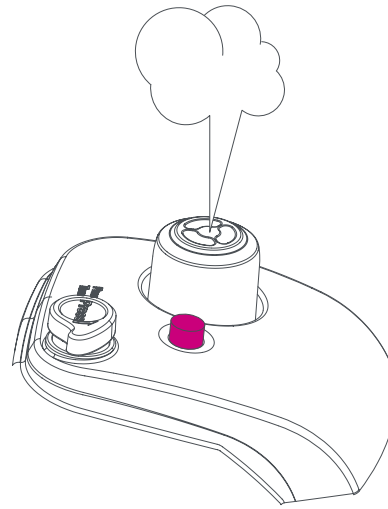

The Steam Release Valve will also open automatically to regulate and maintain optimal pressure while cooking.

Remove the Steam Release Valve cover by pulling it up and off the Steam Release Valve stem.

Clean and inspect the Steam Release Valve cover after each cooker use.

Reinstall the cover by pressing it firmly downward on to the Steam Release Valve stem until it snaps into place.

Do not attempt to operate the pressure cooker without the Steam Release Valve cover installed.

Pressure Control Features

Anti-Block Shield

The Steam Release Valve includes an Anti-Block Shield located on the underside of the lid.

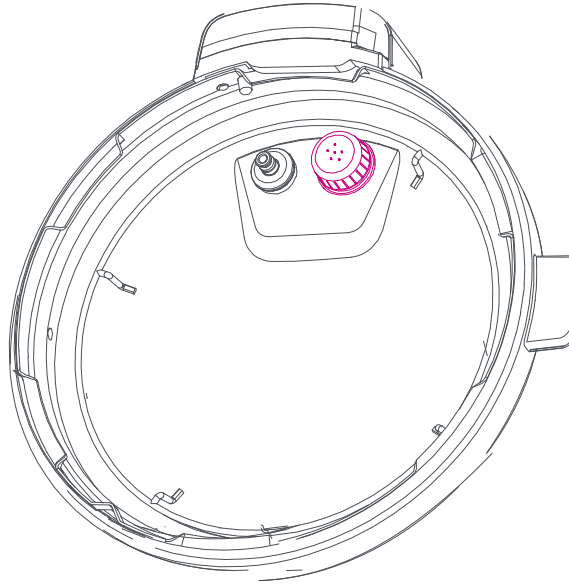

The Anti-Block Shield prevents food particles from entering the Steam Release Valve and affecting the performance of the cooker.

Remove by pressing firmly against the side of the Anti-Block Shield (pressing towards outside edge of lid) until it pops off of the spring tabs.

Clean and inspect the Anti-Block Shield after each use.

Reinstall the Anti-Block Shield by centering it over the spring tabs and pressing down firmly until it snaps into place.

Do not attempt to operate the pressure cooker without the Anti-Block Shield installed.

Pressure Control Features

Condensation Collector

The Condensation Collector holds the condensate that collects naturally in the Condensation Rim while cooking.

To install the Condensation Collector, align and slide the grooves on either side of the top of the reservoir over the tabs in the reservoir holder at the back of the cooker.

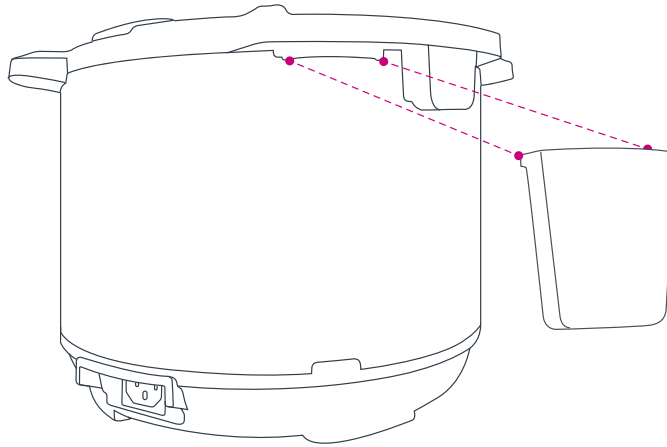

Do not operate the pressure cooker without the Condensation Collector installed.

Depressurizing the Cooker (Venting Methods)

Always follow the Instant Pot pressure cooking recipe instructions for depressurizing the cooker. There are two ways to release pressure. Natural Release (NR) and Quick Relase (QR).

Natural Release

Important: Use Natural Release to depressurize the cooker after cooking high starch foods (e.g., soups, stews, chilis, pasta, oatmeal and congee) or when cooking foods that expand when cooked (e.g., beans and grains).

Leave the Quick Release Button in the closed position. As the temperature within the cooker drops, the cooker will depressurize naturally over time.

Depressurization time varies with volume of food and liquid in the cooker and can take 10–40 minutes or longer. When the cooker is safely depressurized, the Float Valve drops into the lid.

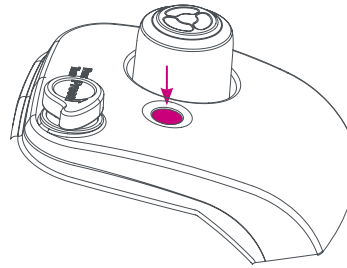

Depressurizing the Cooker (Venting Methods)

Quick Release

Important: Do not use quick release when cooking high starch foods (e.g., soups, stews, chilis, pasta, oatmeal and congee) or when cooking foods that expand when cooked (e.g., beans and grains). To release pressure quickly, press the Quick Release Button down until it locks into place.

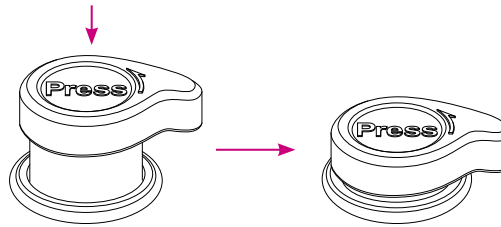

Pressure will be released through the Steam Release Valve. When the cooker is safely depressurized, the Float Valve will lower into the lid.

If quick venting creates undesirable steam spatter, close the Quick Release Button by turning it counter-clockwise until it pops up, and try again after a few minutes. If spatter continues, use the Natural Release procedure to release remaining pressure.

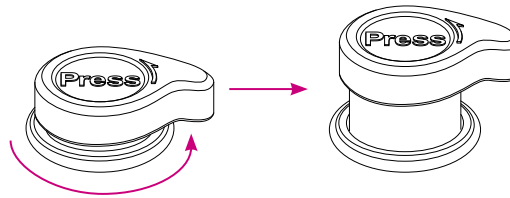

⚠ WARNING		
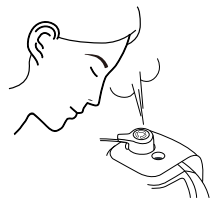	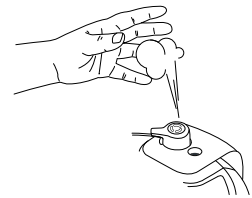	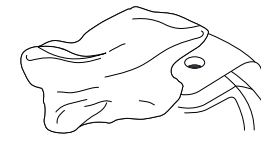
Do **NOT** lean over steam release valve.	Do **NOT** place unprotected skin over steam release valve.	Do **NOT** cover steam release valve.

Initial Test Run

Follow these steps to ensure that your cooker builds and releases pressure properly.

1. Remove the inner pot from the cooker
2. Add 3 cups (750 ml) of water to the inner pot
3. Place inner pot in cooker.
4. Place the lid on the cooker with the ◄▼► on the lid aligned with the 🔓▲ on the cooker base. Turn the lid clockwise until the ◄▼► is aligned with the 🔒▲ on the cooker base. The Quick Release Button will pop up into the sealed position.

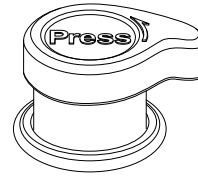

5. Plug the power cord into a 120 V outlet. (The Display will read "**OFF**.")
6. Press **Pressure Cook** to select the Pressure Cook Smart Program.
7. Press **Keep Warm** to deactivate the Keep Warm option.
8. Press "**–/+**" to adjust cooking time to "**00:05**."
9. After 10 seconds, the Display will read "**On**" to indicate that pre-heating has begun.
10. The Float Valve will pop up when the cooker has reached the required pressure level. The Display will count down the remaining cooking time.
11. The Display will read "**End**" when the Smart Program is complete. Press the Quick Release Button down until it locks into place. Steam will be released through the Steam Release Valve. The Float Valve will drop into the lid when the cooker is fully depressurized.
12. Turn the lid counter-clockwise to unlock. Lift the lid, remove the inner pot, discard the remaining water and dry the inner pot.

⚠CAUTION Inner pot will be hot after cooking. Always use oven mitts or Instant Pot Mini Mitts when handling a hot inner pot.

Cooking With the Duo Nova

Pressure Cooking with the Duo Nova

Pre-heating and Pressurization

Pressure cooking is a fast, thorough and energy-efficient way to cook a variety of foods.

Heat vaporizes the liquid inside the cooker and activates the float valve, which pops up automatically to seal and allow the cooker to become pressurized.

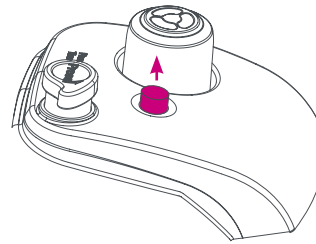

It is normal to see some steam escaping through the float valve during this process. Pressurization time varies with the volume of liquid and food in the cooker.

Cooking

When the required pressure level is reached, cooking begins. The Display will count down the Smart Program cooking time in hours and minutes.

Cooking time, temperature and pressure level can be adjusted while the Smart Program is running.

The Display will read "**00:00**" when the Smart Program is complete.

If **Keep Warm** is activated, the Display shows the elapsed time after Smart Program cooking has ended.

Depressurizing

Always follow the Instant Pot pressure cooking recipe for the correct pressure venting procedure.

⚠CAUTION	Do not attempt to remove lid while cooker is pressurized. See "Depressurizing the Cooker" for more information on releasing pressure. Failure to follow the instructions may result in property damage and/or personal injury.

Cooking With the Duo Nova

Using the Pressure Cooking Smart Programs

Follow these steps when using pressure cooking Smart Programs.

1. Add liquid and food to the inner pot as directed by the recipe.

Size	Minimum Liquid*
3 Quarts / 2.8 Litres	1 cup (8 oz / 250 ml)
6 Quarts / 5.7 Litres	1 1/2 cups (12 oz / 375 ml)
8 Quarts / 7.6 Litres	2 cups (16 oz / 500 ml)

2. Place the inner pot in the cooker.
3. Place the cooker lid on the base, align the ⟷ with the 🔓▲ and turn clockwise to lock 🔒▲ in place. The lid will automatically be in the sealed position and the quick release button will be up.

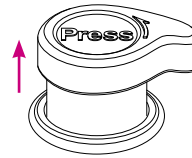

⚠CAUTION	Do not fill inner pot higher than "PC MAX—2/3" line indicated on inner pot. When cooking foods that expand such as rice or beans, do not fill the appliance over "—1/2" line indicated on inner pot.

⚠CAUTION	Liquids must be water-based. To avoid scorching or scalding injury, be cautious when cooking with more than 1/4 cup (2 oz / 60 mL) oil, oil-based sauces, condensed cream-based soups, and thick sauces. Add suitable liquid to thin sauces. Avoid recipes that call for more than 1/4 cup (2 oz / 60 mL) of oil or fat content.

4. Press a pressure cooking Smart Program key.
5. Less Normal More Press the Smart Program key repeatedly to cycle through and select a Smart Program cooking time/temperature setting.
6. Pressure Level Press **Pressure Level** to toggle between the Low and High pressure options.
7. Press − + to adjust cooking time.

   Note: *When cooking begins, pressure cooking settings adjustments will be saved and remembered the next time the Smart Program is selected.*
8. Press **Keep Warm** to turn the Keep Warm option on or off.
9. Press **Delay Start** and the "**–/+**" controls to set the hours and minutes before the Smart Program begins.

   Delay Start countdown will begin automatically after 10 seconds.

   If Delay Start is active, the Display will show the time remaining until the Smart Program cooking begins.

   When the Smart Program begins, the Display will read "**On**" to indicate that preheating is in progress.

   When the cooker reaches the target cooking temperature, cooking begins and the Display will count down the remaining cooking time.

   The Display will read "**End**" when the Smart Program is complete.

   Follow the Instant Pot recipe directions for cooker depressurization before attempting to remove the lid.

   To end the Smart Program at any time, press **Cancel**.

⚠WARNING Until cooker pressurizes and float valve has popped up, lid will be removable. Once pressurized, lid will lock. To avoid scalding injury, do not attempt to force lid open while cooker is pressurized. Failure to follow these instruction may result in property damage and/or personal injury.

Pressure Cooking Default Settings

Smart Program	Settings and Default						
Soup/Broth	Pressure	Low (35–55 kPa / 5–8 psi)			High (65–85 kPa / 9.4–12.3 psi)		
	Setting	Less	Normal	More	Less	Normal	More
	Default Cooking Time (adjustable)	00:20	00:30	04:00	00:20	00:30	04:00
Meat/Stew	Pressure	Low (35–55 kPa / 5–8 psi)			High (65–85 kPa / 9.4–12.3 psi)		
	Setting	Less	Normal	More	Less	Normal	More
	Default Cooking Time (adjustable)	00:20	00:35	00:45	00:20	00:35	00:45
Bean/Chili	Pressure	Low (35–55 kPa / 5–8 psi)			High (65–85 kPa / 9.4–12.3 psi)		
	Setting	Less	Normal	More	Less	Normal	More
	Default Cooking Time (adjustable)	00:25	00:30	00:40	00:25	00:30	00:40
Poultry*	Pressure	Low (35–55 kPa / 5–8 psi)			High (65–85 kPa / 9.4–12.3 psi)		
	Setting	Less	Normal	More	Less	Normal	More
	Default Cooking Time (adjustable)	00:05	00:15	00:30	00:05	00:15	00:30
Rice	Pressure	Low (35–55 kPa / 5–8 psi)			High (65–85 kPa / 9.4–12.3 psi)		
	Setting	Less	Normal	More	Less	Normal	More
	Default Cooking Time (adjustable)	00:08	00:12	00:15	00:08	00:12	00:15
Multigrain*	Pressure	Low (35–55 kPa / 5–8 psi)			High (65–85 kPa / 9.4–12.3 psi)		
	Setting	Less	Normal	More	Less	Normal	More
	Default Cooking Time (adjustable)	00:20	00:40	01:00 (+ 00:45 soaking time)	00:20	00:40	01:00 (+ 00:45 soaking time)
Porridge or Oatmeal	Pressure	Low (35–55 kPa / 5–8 psi)			High (65–85 kPa / 9.4–12.3 psi)		
	Setting	Less	Normal	More	Less	Normal	More
	Default Cooking Time (adjustable)	00:05	00:20	00:30	00:05	00:20	00:30

Pressure Cooking Default Settings

Smart Program	Settings and Default						
Steam	Pressure	Low (35–55 kPa / 5–8 psi)			High (65–85 kPa / 9.4–12.3 psi)		
	Setting	Less	Normal	More	Less	Normal	More
	Default Cooking Time (adjustable)	00:03	00:10	00:15	00:03	00:10	00:15
Pressure Cook	Pressure	Low (35–55 kPa / 5–8 psi)			High (65–85 kPa / 9.4–12.3 psi)		
	Setting	Less	Normal	More	Less	Normal	More
	Default Cooking Time (adjustable)	00:20	00:35	00:45	00:20	00:35	00:45

** Not available on Duo Nova 3 Quart models.*

⚠CAUTION Always use a meat thermometer to ensure the internal temperature of meats reaches a safe minimum internal temperature.

Pressure Cooking Tips

Smart Program	Setting	Suggested Use	Note
Soup/ Broth	Less	Soup without meat	Liquid remains clear due to lack of boiling motion. Always use NR to release pressure when cooking soup with a high starch content.
	Normal	Soup with meat	
	More	Rich bone broth	
Meat/ Stew	Less	Soft texture	Choose setting based on meat texture desired, or adjust cook time manually. Allow meat to "rest" for 5–30 minutes, depending on size. It will retain cooking juices for tender, succulent meat.
	Normal	Very soft texture	
	More	Fall-off-the-bone texture	
Bean/ Chili	Less	Firmer texture	Choose setting based on bean texture desired, or adjust cook time manually. When cooking beans or legumes, always use NR to release pressure. Ensure dry beans are completely submerged in water.
	Normal	Soft texture	
	More	Very soft texture	
Poultry*	Less	Soft texture	Choose setting based on poultry texture desired or adjust cook time manually. Allow meat to "rest" for 5–30 minutes, depending on size. It will retain cooking juices for tender, succulent meat. **6 & 8 Quart only – Mini use **Pressure Cook**.*
	Normal	Very soft texture	
	More	Fall-off-the-bone texture	
Rice	Less	Tender but firm to bite	For cooking medium and long-grain white rice. Depending on the volume of rice, cook time may range from 8–15 minutes. Use 10-Minute Natural Release after cooking for perfect results.
	Normal	Normal texture white rice	
	More	Softer texture white rice	

Pressure Cooking Tips

Smart Program	Setting	Suggested Use	Note
Multi-grain*	Less	Brown rice, wild rice, black beans, chickpeas, etc.	Select "**Less**" or "**Normal**" based on type of grain and desired texture. "**More**" begins with 45 minutes of warm water soaking time prior to 60 minutes of pressure cooking. **6 & 8 Quart only – Mini use **Pressure Cook**.*
	Normal	Brown rice, wild rice, mung beans, etc.	
	More	Tough grains or a mixture of grains and beans	
Porridge	Less	Oatmeal–steel cut or rolled	Adjust time as directed in recipe. Always use NR to release pressure when cooking foods that expand.
	Normal	White rice, porridge/congee	
	More	Rice porridge/congee with a mixture of various grains	
Steam	Less	Vegetables	Use steam rack provided to elevate food above the cooking liquid. Use QR to release pressure to prevent food from overcooking.
	Normal	Fish and Seafood	
	More	Meat	
Pressure Cook	NA	Manual programming	Press **Pressure Level** to toggle between **High** and **Low** pressure. Use **+ / -** keys to adjust cook time. Adjust according to recipe for desired results.

Non-Pressure Cooking With the Duo Nova

Follow these steps when using non-pressure cooking Smart Programs.

Slow Cook

1. Add liquid and food to the inner pot.
2. Place the inner pot in the cooker.
3. Lock the cooker lid in place, or alternatively you can cover the cooker with an Instant Pot Glass Lid (purchased separately).

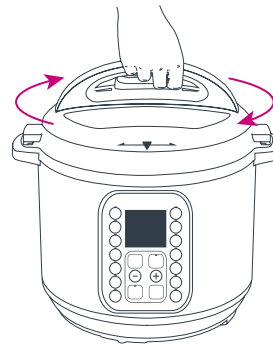

4. Press the Quick Release Button down to ensure that the Steam Release Valve is open.

5. Press **Slow Cook**.

6. Less Normal More Press **Slow Cook** again to adjust the cooking temperature.

Setting	Suggested Use
Less	4.5 hours to 97–100°C / 207–212°F
Normal	3.5 hours to 97–100°C / 207–212°F
More	2.5 hours to 97–100°C / 207–212°F

Time to reach target temperature can be +/– 30 minutes from set time.

7. Press – + to adjust cooking time.

   Note: *When cooking begins, the setting will be saved and remembered the next time the Smart Program is selected.*

   Optionally, press **Keep Warm** to turn the food warming option on or off.

   Optionally, press **Delay Start** and use the "**–/+**" controls to adjust the duration of the delay.

   The **Slow Cook** Smart Program will begin automatically after 10 seconds.

   If Delay Start is active, Display will count down the time remaining until the Smart Program begins.

   When the Smart Program begins, the Display will read "**On**" to indicate that preheating is in progress.

   When cooking begins, the Display will count down the remaining cooking time.

   The Display will read "**End**" when the Smart Program is complete.

   To end the Smart Program at any time, press **Cancel**.

Smart Program – Sauté

1. Place the inner pot in the cooker.
2. Press **Sauté**.
3. Less Normal More Press **Sauté** again to adjust the cooking temperature.

Setting	Suggested Use
Less	Simmering, thickening and reducing liquids
Normal	Pan searing or sautéing
More	Stir-frying or browning meat

Note: *Cooking temperature adjustments will be saved to the Smart Program when cooking begins.*

The **Sauté** Smart Program will begin automatically after 10 seconds and the Display will read "**On**" to indicate that heating is in progress.

When the cooker has reached the target cooking temperature, the Display will read "**Hot**" to indicate that food may be added to the inner pot.

Note: *The Display may alternate between "On" and "Hot" during cooking to indicate that the cooker is maintaining the target cooking temperature.*

The Display will read "**End**" when the Smart Program is complete.

To end the Smart Program at any time, press **Cancel**. You cannot use the **Keep Warm** function with **Sauté**.

When using **Sauté** mode with pressure cooking, always ensure you deglaze the pot after you are finished sautéing and before you pressure cook as food can get stuck on the bottom of the inner pot.

Deglazing involves adding a thin liquid like water or broth to the hot surface and scraping the bottom with a silicone scraper or wooden spatula to remove anything that may be stuck to the bottom.

Deglazing also adds flavor to your dish and can prevent getting a "burn" notice.

⚠ WARNING When sautéing, food may burn if unmonitored. To avoid burning, do not leave cooker unattended and do not use a lid.

Non-Pressure Cooking With the Duo Nova

Smart Program – Yogurt

Smart Program	Setting	Suggested Use	Note
Yogurt	Less	For Jiu Niang, a sweet fermented glutinous rice dessert	Default fermentation time is "24:00" hours. Adjust time based on recipe.
	Normal	Fermenting milk after curlture has been added	Default fermentation time is "08:00" hours. Adjust as desired up to "99:30" hours. "yogt" will be displayed on-screen when completed.
	More	Pasteurizing milk	"boiL" will be displayed while Program is running. "yogt" will be displayed when completed.

Step 1 – Pasteurize Milk

1. Add milk to the inner pot.

Minimum and Maximum Milk Volumes		
Duo Nova Model	Minimum	Maximum
3 Quart / 2.8 Litres	2 cups (6.7 oz / 473.2 mL)	2 quarts (80 oz / 2.3 L)
6 Quart / 5.7 Litres	4 cups (32 oz / 946.4 mL)	4 quarts (128 oz / 4.5 L)
8 Quart / 7.6 Litres	6 cups (50 oz / 1419.5 mL)	6 quarts (240 oz / 6.8 L)

2. Place the inner pot in the cooker.
3. Lock the cooker lid in place.

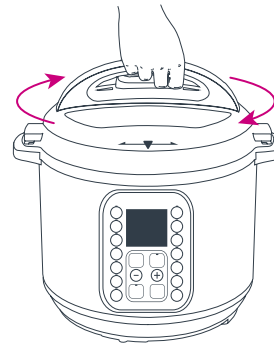

4. Press the Quick Vent Control down to ensure that the Steam Release Valve is open.

5. Press **Yogurt**.
6. Press **Yogurt** again to adjust the cooking temperature to **More**. The Display will read "**boiL**."

   The Yogurt Smart Program will begin automatically after 10 seconds.

   When the cooker has reached the target cooking temperature for Step 1, the Display will read "**End**" and return to Standby mode.

   Note: *Use a thermometer to ensure that the milk has reached the pasteurization temperature of 161°F / 72°C.*

Step 2 – Add Starter Culture

1. Remove the inner pot from the cooker and allow the milk to cool.
2. Add starter culture to the milk in accordance with the instructions included with starter culture product.

   Note: *Plain yogurt with active cultures can also be used as a starter. Follow a trusted Instant Pot yogurt recipe when using yogurt as a starter culture.*

3. Place the inner pot in the cooker.
4. Lock the cooker lid in place.
5. Press the Quick Release Button down to ensure that the Steam Release Valve is open.

Step 3 - Ferment

6. Press **Yogurt**.
7. Press **Yogurt** again to adjust the cooking temperature to **Normal**. The Display will read "**08:00**" (i.e., the default fermentation time).

   Optionally, press "**–/+**" to adjust fermentation time.

   The **Yogurt** Smart Program will begin automatically after 10 seconds and the Display will show the elapsed cooking time.

   The Display will read "**End**" when the Smart Program is complete.

   To end the Smart Program at any time, press **Cancel**.

Using Pre-measured Yogurt Cups

Pre-measured yogurt cups can be used with the Yogurt Smart Program.

1. Transfer the milk to the pre-measured yogurt cups.
2. Seal the pre-measured yogurt cups.
3. Clean the inner pot thoroughly.
4. Place the Steam Rack in the bottom of the Inner Pot.
5. Place the sealed yogurt cups on the Steam Rack and add water to the Inner Pot until the cups are submerged halfway.

Smart Program - Keep Warm (Manual)

1. With the cooker in Standby mode, press **Keep Warm**.
2. Less Normal More Press **Keep Warm** again to toggle through the Less / Normal / More temperature settings. See Default Settings on next page.
3. − + Press "**–/+**" to adjust the warming time to a maximum of 99:50 hours.

   Note: Keep Warm *function will count up.*

Non-Pressure Cooking Default Settings

Smart Program	Settings and Defaults			
Slow Cook	Setting	Less	Normal	More
	Default Cooking Time (adjustable)	08:00	06:00	04:00
	Cooking Temperature (not adjustable)	97–100°C / 207–212°F		
Sauté	Setting	Less	Normal	More
	Default Cooking Time (not adjustable)	00:30		
	Cooking Temperature (not adjustable)	105°C / 221°F	169°C / 156°F	174°C / 345°F
Yogurt	Setting	Less	Normal	More
	Default Cooking Time	24:00 (adjustable)	08:00 (adjustable)	boiL (not adjustable)
	Cooking Temperature (not adjustable)	33°C / 91.5°F	42°C / 108°F	83–88 °C / 181.4–190.4°F
Keep Warm	Setting	Less	Normal	More
	Cooking Temperature (not adjustable)	56°C / 133°F	63°C / 145°F	74°C / 165°F

Care & Cleaning

Clean the pressure cooker after each use. Always ensure the inner pot is dry on the outside before inserting into the cooker base and that the cooker base is free of food or debris.

Always unplug the cooker and let it cool to room temperature before cleaning.

Never use harsh chemical detergents, scouring pads, or powders to clean any part of the cooker.

Cleaning Method	Part	Cleaning Tip
Dishwasher Safe or Hand Wash	Accessories • Steam Rack • Condensation Collector	Never use harsh chemical detergents, powders or scouring pads on accessories Place on top rack of dishwasher Wash after each use
	Lid Small Parts • Anti-Block Shield • Sealing Ring • Steam Release Handle • Float Valve • Float Valve Silicone Cap	Remove small parts from lid before washing Inspect and clean steam release pipe regularly Wash after each use with hot water and mild dish soap All small parts should be removed once every few cooking cycles for routine cleaning, and any time there is visible food particles
	Inner Pot	Do not use abrasive cleaners or scouring pads on inner pot Acute hard water staining may require scrubbing with a vinegar dampened sponge Wash after each use Ensure all surfaces are dry before placing in cooker base
Damp Wash Only	Detachable Power Cord (3 & 6 Quart Only)	Use a barely damp cloth to wipe any particles off power cord.
	Cooker Base	Wipe the inside of the outer pot as well as the condensation rim with a barely damp cloth, and allow to air dry Clean cooker base and control panel with a soft, barely damp cloth or sponge

Care & Cleaning

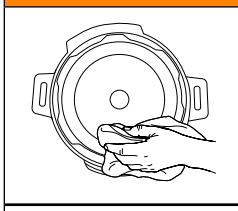	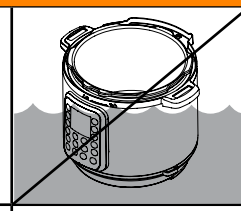	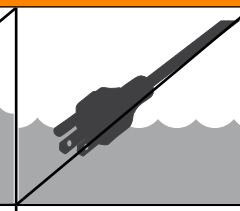	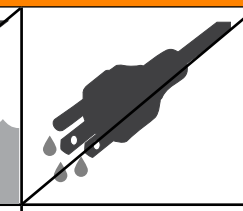
Ensure heating element remains dry at all times.	Do not immerse cooker base in water or attempt to cycle through dishwasher.	Do not submerge power cord at any time.	Do not wet prongs of power cord.

Troubleshooting

Register your product today at **instantpot.com/support/register.** To contact Customer Care, call **1 800 828 7280**, email **support@instantpot.com** or chat **instantpot.com/#Chat.**

Problem	Possible Reason	Solution
Difficulty closing lid	Sealing ring not properly installed	Reposition sealing ring, ensure it is snug behind sealing ring rack
	Float valve in the popped-up position	Gently press the float valve downward with a long utensil
	Contents in cooker are still hot	Turn steam release handle towards "**Venting**" position, then lower lid onto cooker base slowly, allowing heat to dissipate
Difficulty opening lid	Pressure inside the cooker	Release pressure according to recipe; only open lid after float valve has dropped down
	Float valve stuck at the popped-up position due to food debris or residue	Ensure steam is completely released by quick releasing pressure, then press float valve gently with a long utensil. Open lid cautiously. Thoroughly clean float valve, surrounding area, and lid before next use.
	⚠CAUTION Contents may be under pressure. To avoid scalding injury, do not attempt to force lid open.	
Inner pot is stuck to lid when cooker is opened	Cooling of inner pot may create suction, causing inner pot to adhere to the lid	To release the vacuum, turn steam release handle towards "**Venting**" position
Steam leaks from side of lid	Sealing ring damaged or not installed properly	Replace sealing ring
	Lid not closed properly	Open then close lid
	Sealing ring rack is warped or off-centre	Remove sealing ring from lid, check sealing ring rack for bends or warps, contact Customer Care
	Food debris attached to sealing ring	Remove sealing ring and clean thoroughly
	Inner pot rim may be misshapen	Check for deformation and contact Customer Care

Troubleshooting

Problem	Possible Reason	Solution
Float valve does not rise	Food debris on float valve or float valve silicone cap	Remove float valve from lid and clean thoroughly; perform "**Initial Test Run**" to check for function; contact Customer Care
	Too little liquid in the inner pot	Check for scorching on bottom of inner pot; add 1 1/2 cups (12 oz / 325 mL) liquid to inner pot
	Float valve silicone cap worn, damaged or missing	Install or replace float valve
	Float valve obstructed by lid-locking mechanism	Tap float valve with a long utensil. If not resolved, turn cooker off and remove small parts from lid; clean thoroughly and re-install, then perform "**Initial Test Run**" to check for function; contact Customer Care
	No heat in the inner pot	Perform "**Initial Test Run**" to check for function; contact Customer Care
	Inner pot base may be damaged	Perform "**Initial Test Run**" to check for function; contact Customer Care
Minor steam leaking/hissing from steam release handle during cook cycle	Steam release handle not in "**Sealing**" position	Turn steam release handle to "**Sealing**" position
	Cooker is regulating excess pressure	This is normal; no action required
Steam gushes from steam release handle when in "Sealing" position	Not enough liquid in the inner pot	Add 1 1/2 cups (12 oz / 325 mL) of a thin cooking liquid to inner pot
	Pressure sensor control failure	Contact Customer Care
	Steam release handle not seated properly	Turn steam release handle to "**Sealing**" position
Display remains blank after connecting the power cord	Bad power connection or no power	Inspect power cord; ensure detachable power cord is plugged tightly into base power socket; check outlet to ensure it is powered
	Cooker's electrical fuse has blown	Contact Customer Care
Occasional clicking or light cracking sound	The sound of power switching and expanding pressure board when changing temperatures	This is normal; no action required
	Bottom of the inner pot is wet	Wipe bottom of inner pot, and ensure heating element is dry before cooking

Error Codes

Problem	Possible Reason		Solution
Error code appears on display and cooker beeps continuously	C1 C2 C6 C6H C6L	Faulty sensor	Contact Customer Care.
	C5	Temperature is too high because inner pot is not placed in the cooker base	Press **Cancel** and wait for heating element to cool; ensure there are no foreign objects in cooker base; insert or reposition inner pot in cooker base and re-enter commands.
		Temperature is too high because there is no water in inner pot	Check for scorching on bottom of inner pot; remove if necessary. Add thin, water-based liquid to inner pot based on size: 3 Qt - 1 cup | 6 Qt - 1 1/2 cups 8 Qt - 2 cups
	C7 or NoPr	Heat element has failed	Contact Customer Care
		Not enough liquid	Add thin, water-based liquid to inner pot based on size: 3 Qt - 1 cup | 6 Qt - 1 1/2 cups 8 Qt - 2 cups
		Steam release handle is in the "**Venting**" position	Turn steam release handle to "**Sealing**" position.
	Lid	Lid is not in the correct position for the selected program	Open and close the lid. Do not use a lid when using **Sauté**.
	OvHt / Burn / Food burn	High temperature detected at bottom of inner pot; cooker automatically reduces temperature to avoid overheating	Starch deposits at the bottom of the inner pot may have blocked heat dissipation. Turn the cooker off, release pressure according to the recipe, and inspect the bottom of the inner pot.
	PrSE	Pressure has accumulated during a non-pressure cooking program	Turn steam release handle to "**Venting**" position.

If the problems persist or for any service issue, contact an authorized service representative at **support@instantpot.com** or by creating a support ticket **instantpot.com/support**.
DO NOT ATTEMPT TO SERVICE THE APPLIANCE YOURSELF.

Warranty

Limited Warranty

This Limited Warranty is effective for one year from the date of original consumer purchase. Proof of original purchase date and, if requested by an authorized representative of Instant Brands Inc. ("Instant Brands"), return of your appliance, is required to obtain service under this Limited Warranty. Provided that this appliance is operated and maintained in accordance with written instructions attached to or furnished with the appliance, Instant Brands will, in its sole and exclusive discretion, either: (i) repair defects in materials or workmanship; or (ii) replace the appliance. In the event that your appliance is replaced, the Limited Warranty on the replacement appliance will expire 12 months from the date of original consumer purchase.

This Limited Warranty extends only to the original purchaser and use of the appliance in the United States of America and Canada. This warranty does not cover units that are used outside of the United States of America and Canada.

Any modification or attempted modification to your appliance may interfere with the safe operation of the appliance and will void this Limited Warranty. This Limited Warranty does not apply in respect of any appliance or any part thereof that has been altered or modified unless such alterations or modifications were expressly authorized by an Instant Brands representative.

Limitation and Exclusions

The liability of Instant Brands, if any, for any allegedly defective appliance or part shall in no circumstances exceed the purchase price of a comparable replacement appliance.

This Limited Warranty does not cover:

1. Damage resulting from accident, alteration, misuse, abuse, neglect, unreasonable use, use contrary to the operating instructions, normal wear and tear, commercial use, improper assembly, disassembly, failure to provide reasonable and necessary maintenance, fire, flood, acts of God or repair by anyone unless directed by an Instant Brands Representative;
2. Repairs where your appliance is used for other than normal, personal use or when it is used in a manner that is contrary to published user or operator instructions; or
3. Use of unauthorized parts and accessories, or repairs to parts and systems resulting from unauthorized repairs or modifications made to this appliance.

The cost of repair or replacement under these excluded circumstances shall be paid by you.

Warranty

Disclaimer of Implied Warranties

EXCEPT AS EXPRESSLY PROVIDED HEREIN AND TO THE EXTENT PERMITTED BY LAW, INSTANT BRANDS MAKES NO WARRANTIES, CONDITIONS OR REPRESENTATIONS, EXPRESS OR IMPLIED, BY STATUTE, USAGE, CUSTOM OF TRADE OR OTHERWISE WITH RESPECT TO THE APPLIANCES OR PARTS COVERED BY THIS WARRANTY, INCLUDING BUT NOT LIMITED TO, WARRANTIES, CONDITIONS, OR REPRESENTATIONS OF WORKMANSHIP, MERCHANTABILITY, MERCHANTABLE QUALITY, FITNESS FOR A PARTICULAR PURPOSE OR DURABILITY.

Some states or provinces do not allow for the exclusion of implied warranties of merchantability or fitness, so this limitation may not apply to you. In these states and provinces, you have only the implied warranties that are expressly required to be provided in accordance with applicable law.

Limitation of Remedies; Exclusion of Incidental and Consequential Damage

YOUR SOLE AND EXCLUSIVE REMEDY UNDER THIS LIMITED WARRANTY SHALL BE APPLIANCE REPAIR OR REPLACEMENT AS PROVIDED HEREIN. INSTANT BRANDS SHALL NOT BE LIABLE FOR INDIRECT, INCIDENTAL OR CONSEQUENTIAL DAMAGES ARISING OUT OF OR IN CONNECTION WITH THE USE OR PERFORMANCE OF THE APPLIANCE OR DAMAGES WITH RESPECT TO ANY ECONOMIC LOSS, PERSONAL INJURY, LOSS OF PROPERTY, LOSS OF REVENUES OR PROFITS, LOSS OF ENJOYMENT OR USE, COSTS OF REMOVAL, INSTALLATION OR OTHER INDIRECT, INCIDENTAL OR CONSEQUENTIAL DAMAGES OF ANY NATURE OR KIND.

Warranty Registration

Please visit www.instantpot.com/support/register to register your new Instant Brands™ appliance and validate your warranty within thirty (30) days of purchase. You will be asked to provide the store name, date of purchase, model number (found on the back of your appliance) and serial number (found on the bottom of your appliance) along with your name and email address. The registration will enable us to keep you up to date with product developments, recipes and contact you in the unlikely event of a product safety notification. By registering, you acknowledge that you have read and understand the instructions for use, and warnings set forth in the accompanying instructions.

Warranty Service

To obtain service under this warranty, please contact our Customer Service Department by phone at 1-800-828-7280 or by email to support@instantpot.com. You can also create a support ticket online at www.instantpot.com/support. If we are unable to resolve the problem, you may be asked to send your appliance to the Service Department for quality inspection. Instant Brands is not responsible for shipping costs related to warranty service, save and except for shipping costs associated with the return of your appliance from Canada or within the 48 contiguous states and the District of Columbia of the United States of America, as provided herein. When returning your appliance, please include your name, mailing address, email address, phone number, and proof of the original purchase date as well as a description of the problem you are encountering with the appliance.

Instant Pot

Instant Brands Inc.
11–300 Earl Grey Dr., Suite 383
Ottawa, Ontario
K2T 1C1
Canada

Register your product today at:
instantpot.com/support/register

Contact Customer Care:

1-800-828-7280

support@instantpot.com

instantpot.com/#Chat

instantpot.com

store.instantpot.com

Copyright © 2019 Instant Brands™ Inc

686-0101-51