ROCCBOX

USER MANUAL

Roccbox User Manual Book.indb 1 07/03/2017 14:17:31

Roccbox User Manual Book.indb 2 07/03/2017 14:17:31

DANGER

If you smell gas:

- Shut gas off to the appliance.
- Extinguish any open flame.
- If odour continues, keep away from the appliance and immediately call your fire department.

This instruction manual contains important information necessary for the proper assembly and safe use of the appliance.

Read and follow all warnings and instructions before assembling and using the appliance.

Follow all warnings and instructions when using the appliance.

Keep this manual for future reference.

Never operate this appliance in enclosed areas.

Failure to follow these instructions could result in fire or explosion which could cause property damage, personal injury or death.

- Never operate this appliance unattended.
- Never operate this appliance within 10ft (3.0m) of any structure, combustible material or other gas cylinder.
- Never operate this appliance within 25ft (7.5m) of any flammable liquid.
- Do not fill cooking vessel beyond the limitation of the door dimensions.
- Heated liquids remain at scalding temperatures long after cooking process. Never touch cooking appliance until liquids have cooled to 115°F (45°C) or less.
- If a fire should occur, keep away from the appliance and immediately call your fire department. Do not attempt to extinguish an oil or a grease fire with water.

Roccbox User Manual Book.indb 3 07/03/2017 14:17:31

Roccbox User Manual Book.indb 4 07/03/2017 14:17:31

HEY!

You're now an official Roccbox owner and part of our family, which means average food is a thing of the past! Prepare your taste buds and make sure the supermarket is still open because your next meal is about to get interesting!

ROCCBOX 2016

CONTENTS

Say hello to Roccbox
- Show you the ropes 8

General Safety
- Overview of safety information 10
- Partial Enclosures 12
- What to do if there's a fire 14
- Areas that need caution 15
- Carbon Monoxide 16

Firing up Wood
- Burner Assembly 20
- Wood Safety 21
- Woods to Use 22
- First Firing 24
- Cleaning and Maintenance 26

Firing up Gas
- Burner Assembly 30
- Gas Safety 32
- Connecting to Gas 36
- Checking for Gas Leaks 42
- Disconnecting from Gas 44
- First Firing 46
- Cleaning and Maintenance 48

That really interesting part...
- Warranty 50
- Regulatory Compliance 52
- End of Life 52
- General Advice 53
- Safe Setup 54
- Safe Operation with Wood 55
- Safe Operation with Gas 56

Recipes 57

Roccbox User Manual Book.indb 6 07/03/2017 14:17:32

Roccbox User Manual Book.indb 7 07/03/2017 14:17:33

SHOWING YOU THE ROPES

Just check no one's looking, else you may seem a little crazy! But seriously, take a second to familiarise yourself with all of Roccbox's components and check that the product isn't damaged. It is important you do this before every firing.

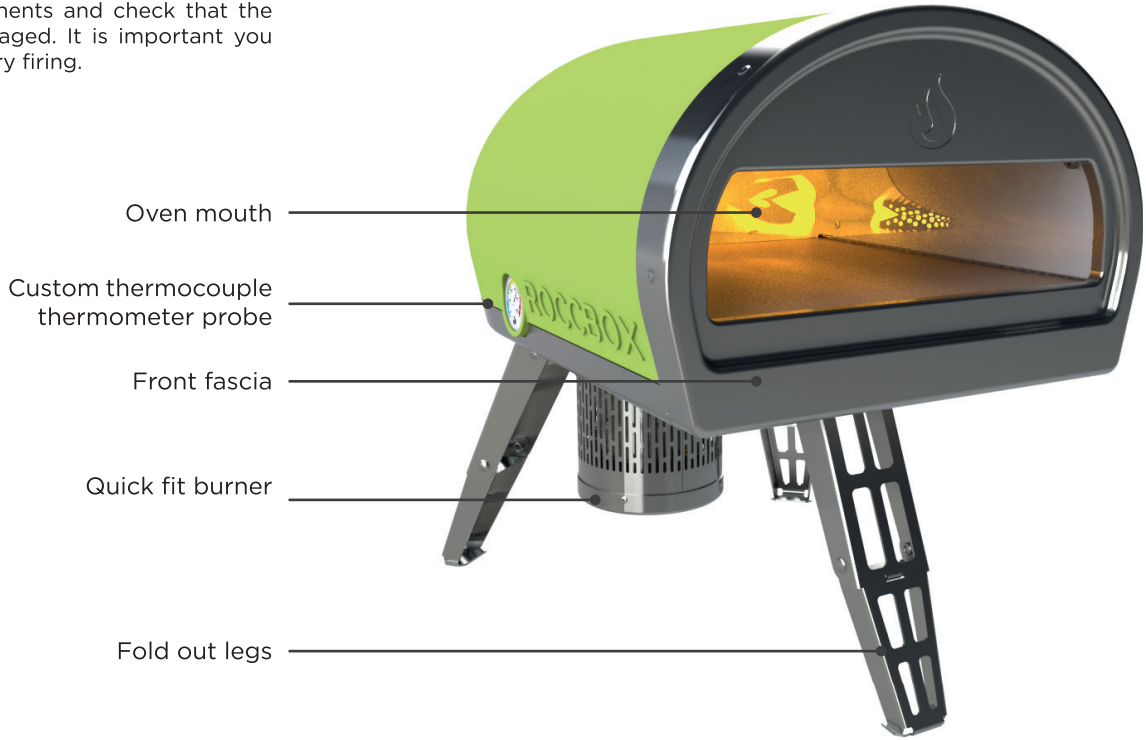

Roccbox User Manual Book.indb 8 07/03/2017 14:17:33

Roccbox Oven

User Manual
(you're reading it)

Pizza Peel
(not dishwasher safe)

Wood Hopper

Gas Burner

Roccbox User Manual Book.indb 9 07/03/2017 14:17:35

STOP!

Before you burn down the house with your mad cooking skills, it is important you read this safety information. Failure to follow these instructions could result in fire or explosion which could cause property damage, personal injury or death. Assembly and usage of the oven should be carried out by a competent person.

This appliance has to be installed on a secure level base prior to use.

WARNING: This appliance will become very hot, do not move it during operation.

WARNING: Keep away from children and pets.

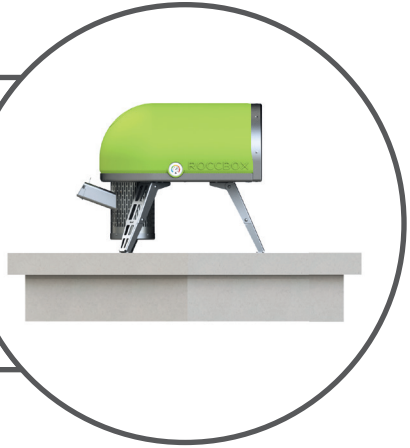

WARNING: - Failure to follow the instructions and observe the warnings provided in this operating manual could result in serious bodily injury or damage to property. Please read the complete manual before assembly or operation of your Roccbox. NOTE TO INSTALLER: This manual must remain with the owner for future reference.

Do not store combustible material within 45cm (18inches) of the burner or mouth of the oven.

Do not use in enclosed areas. Roccbox and the burner must be well ventilated.

Do not use plastic or glass utensils inside the Roccbox

Do not move or leave the Roccbox unattended whilst in use.

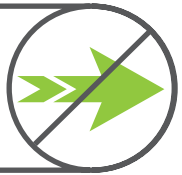

Roccbox User Manual Book.indb 10 07/03/2017 14:17:35

Do not operate Roccbox in strong winds. Wind can extinguish flame.

Exercise caution when carrying Roccbox. Don't use the oven mouth as a handle.

Don't use water whilst cooking. This is dangerous and can crack the stone.

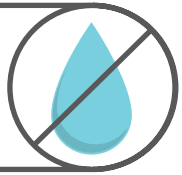

Product may contain sharp edges! Please use caution.

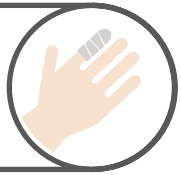

Do not wear flammable loose garments or sleeves when using the Roccbox.

Do not cover oven mouth, this will cause damage to the over.

Warning: Contact your local municipality for any building codes regulating the installation of outdoor barbecue appliances. Outdoor installations must conform to local codes or, in the absence of local codes, with the following:

USA: National Fuel Gas Code, ANSI Z223.1/NFPA 54

CAN: CGA: B149.1 Natural Gas & Propane Installation Code.

AUST/NZ: Australian Standards Code AS: 5601 as well as the requirements of any local council, gas electricity authority or other statutory regulation.

Spanner tighten all gas fittings as per instructions.

Do not modify the appliance. Parts sealed by the manufacturer or the company shall not be manipulated.

Roccbox User Manual Book.indb 11 07/03/2017 14:17:35

PARTIAL ENCLOSURES

The appliance shall only be used in an above ground, open air situation with natural ventilation, without stagnant areas, where gas leakage and products of combustion are rapidly dispersed by wind and natural convention. Any enclosure in which the appliance is used shall comply with one of the following:

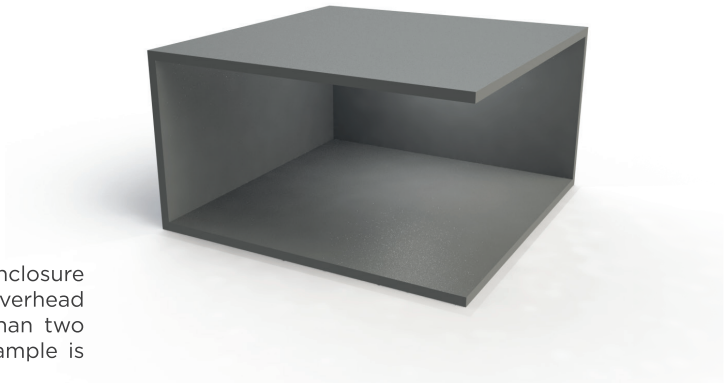

Within a partial enclosure that includes an overhead cove and no more than two walls. A common example is an outdoor gazebo.

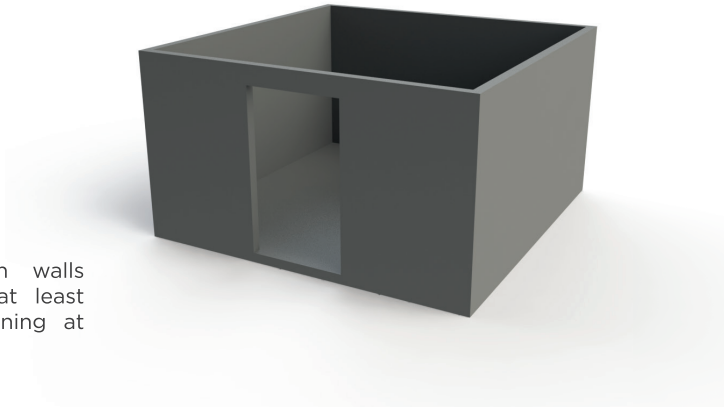

Any enclosure with walls on all sides but at least one permanent opening at ground level

Roccbox User Manual Book.indb 12 07/03/2017 14:17:35

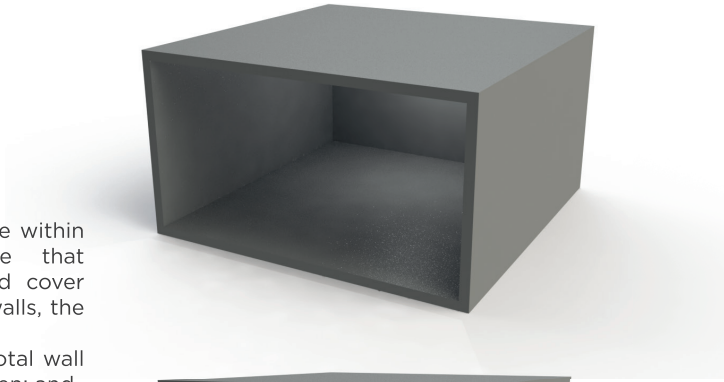

The appliance may be within a partial enclosure that includes an overhead cover and more than two walls, the following shall apply:
at least 25% of the total wall area is completely open; and
at least 30% of the remaining wall area is open and unrestricted.

Within a partial enclosure that includes an overhead cove and no more than two walls. A common example is an outdoor gazebo.

Roccbox User Manual Book.indb 13 07/03/2017 14:17:36

FIRE

Most fires are caused by a build up of grease, or (if using gas) an improper gas connection. Ensure all people and pets are kept as far away as possible.

If you are able, turn the gas off at the cylinder or the on/off valve where applicable. Use a fire extinguisher if possible. If water is the only fire retardant available, thoroughly soak the area around the appliance. When spraying water on the Roccbox itself, do not use a strong jet of water, as this may cause splashing of burning grease, resulting in a further spreading of the fire.

Roccbox User Manual Book.indb 14 07/03/2017 14:17:36

HOT!

The inside of the oven can reach extremely high temperatures. Therefore the front end cap and burners can get especially hot. Please use caution when operating the oven.

Do not touch! The Roccbox can get extremely hot when in operation. Be sure to wear protective gloves.

Roccbox User Manual Book.indb 15 07/03/2017 14:17:36

CARBON MONOXIDE

Carbon Monoxide is a highly poisonous gas which can be produced when the device isn't working correctly. Whether you are using gas or wood, carbon monoxide can be produced when the burner is not receiving enough ventilation. We therefore recommend using the device in a well ventilated area away from direct wind and to never cover the oven mouth.

It is difficult to know when your device is producing Carbon Monoxide as it is an odourless and colourless gas. It can, however cause these symptoms when you are exposed to it:

Tightness across the forehead
Headache,
Weakness,
Dizziness,
Nausea,
Vomiting,
Coma, intermittent convulsions,
Depressed heart action, slowed respiration,
If the exposure has been severe it may cause death.

Roccbox User Manual Book.indb 16 07/03/2017 14:17:36

PRODUCT INFORMATION

Roccbox Limited. Units 18 & 19, Radar Way, Christchurch, Dorset, BH23 4FL UK.				
Appliance Name			Roccbox oven	
Model/Type No.			RBX1 - 2016	
Trade name			Roccbox	
Total nominal heat input for the gas burner			4.2 kW (306 g/h) for $I_{3+(28\text{-}30/37)\ \&\ I3B/P(30)}$ 5.6 kW (408 g/h) for $I_{3B/P(50)}$	
Injector size			1mm	
Gas Category	$I_{3+(28\text{-}30/37)}$		$I_{3B/P(30)}$	$I_{3B/P(50)}$
Gas Type	Butane	Propane	Butane, Propane or their mixtures	Butane, Propane or their mixtures
Gas Pressure	28-30 mbar	37 mbar	28-30 mbar	50 mbar
Destination countries	BE, FR, IT, LU, IE, GB, GR, PT, ES, CY, CZ, LT, SK, CH, SI and LV		LU, NL, DK, FI, SE, CY, CZ, EE, LT, MT, SK, SI, BG, IS, NO, TR, HR, RO, IT, HU and LV.	AT, DE, SK, CH, LU

Use outdoors only.

CE
0845-16

Read the instructions before using the appliance.
WARNING: accessible parts may be very hot. Keep young children away.
WARNING! Do not use spirit or petrol for lighting or re-lighting! (for wood burner)

Pin Code: 0845CR0004

Roccbox User Manual Book.indb 17 07/03/2017 14:17:36

Roccbox User Manual Book.indb 18 07/03/2017 14:17:36

LETS COOK

Your guide to burning wood

Roccbox User Manual Book.indb 19 07/03/2017 14:17:36

SETTING UP THE WOOD

1

Place Roccbox on a flat, even surface

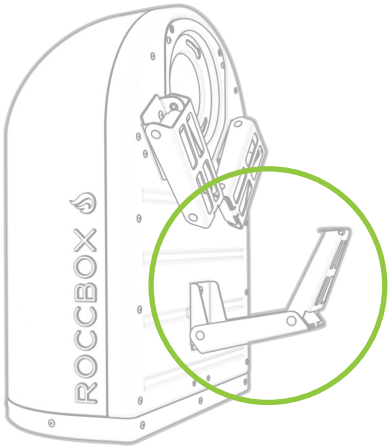

2

Unfold the legs

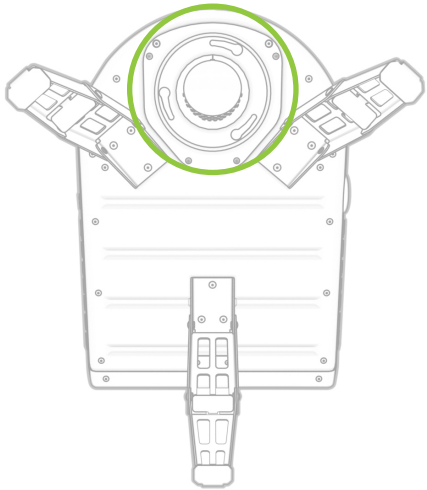

3

Bayonet fitting on Roccbox

Roccbox User Manual Book.indb 20 07/03/2017 14:17:37

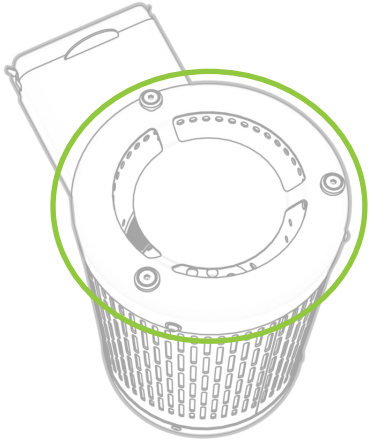

4

Bayonet fitting on Burner

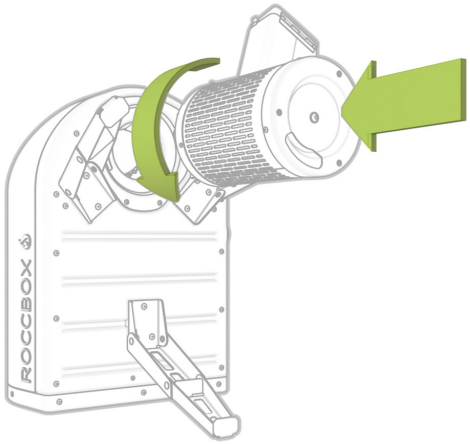

5

Push and twist anticlockwise

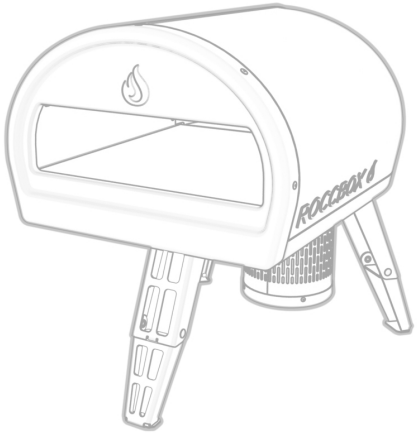

6

Done!

Roccbox User Manual Book.indb 21 07/03/2017 14:17:37

WOOD SAFETY

Before you burn down the house with your mad cooking skills, you'll need to read these safety concerns. For more information regarding safety please read the comprehensive safety page at the back of the manual.

This appliance has to be installed on a secure level base prior to use.

WARNING: This appliance will become very hot, do not move it during operation.

WARNING: Keep away from children and pets.

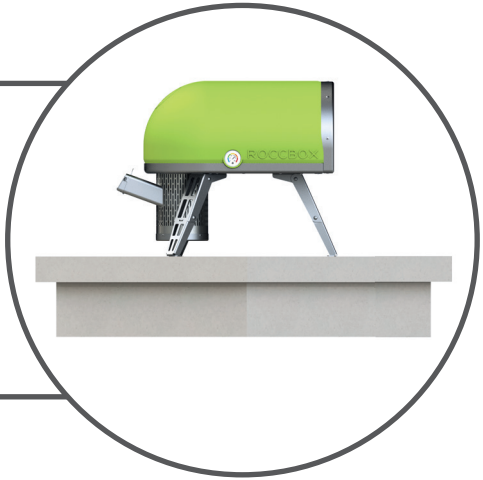

Do not use spirit or petrol for lighting or re-lighting! Use only firelighters complying to EN1860-3!

Do not use charcoal or barbecue coals.

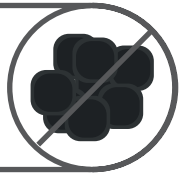

Do not use treated or painted wood.

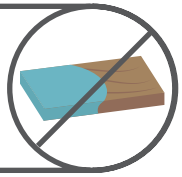

Do not use soft woods (pine and sappy woods) or freshly cut wood.

Roccbox User Manual Book.indb 22 07/03/2017 14:17:37

WOODS TO USE

WOODS NOT TO USE

Pine
Fir
Cedar
Redwood
Spruce
Old Pallets
Painted. Stained wood
Unknown timber
Old Christmas Trees
Books

WOODS TO USE

Ash
Oak
Beech
Fruit trees Apple, Pear etc
Compressed Briquettes

Roccbox User Manual Book.indb 23 07/03/2017 14:17:37

LETS COOK! (FOR REAL THIS TIME)

STEP 1 Using your kiln dried, non treated wood, chop into chunky kindling lengths of around 5 inches (12.5cm) and up to an inch thick (2.5cm).

Using a natural fire lighter, place in the centre of the Roccbox Wood Burner Hopper and light it. After the fire lighter has lit fully, push it down the Hopper shoot and into the Wood Burning Chamber.

STEP 2 Introduce two or three pieces of kindling and leave to burn for a few minutes. Once the first two or three pieces are burning fully you should be able to see a flame at the back of the Roccbox oven. At this point you can then add additional pieces, we recommend 3-4 initially and begin to bring your Roccbox up to cooking temperature.

ROCCTIP

For the first firing after purchasing, we highly recommend firing the oven up slowly over a 30 minute period, keeping the temperatures low. This is to help properly cure the oven.

Warning: This appliance will become extremely hot. Do not move and keep away from children and pets.

Roccbox User Manual Book.indb 24 07/03/2017 14:17:37

STEP 3 Check the dial, when that hits 300 you're ready to cook. It should take around 15 - 20 minutes. Do not over fill the oven whilst cooking. This can damage the oven.

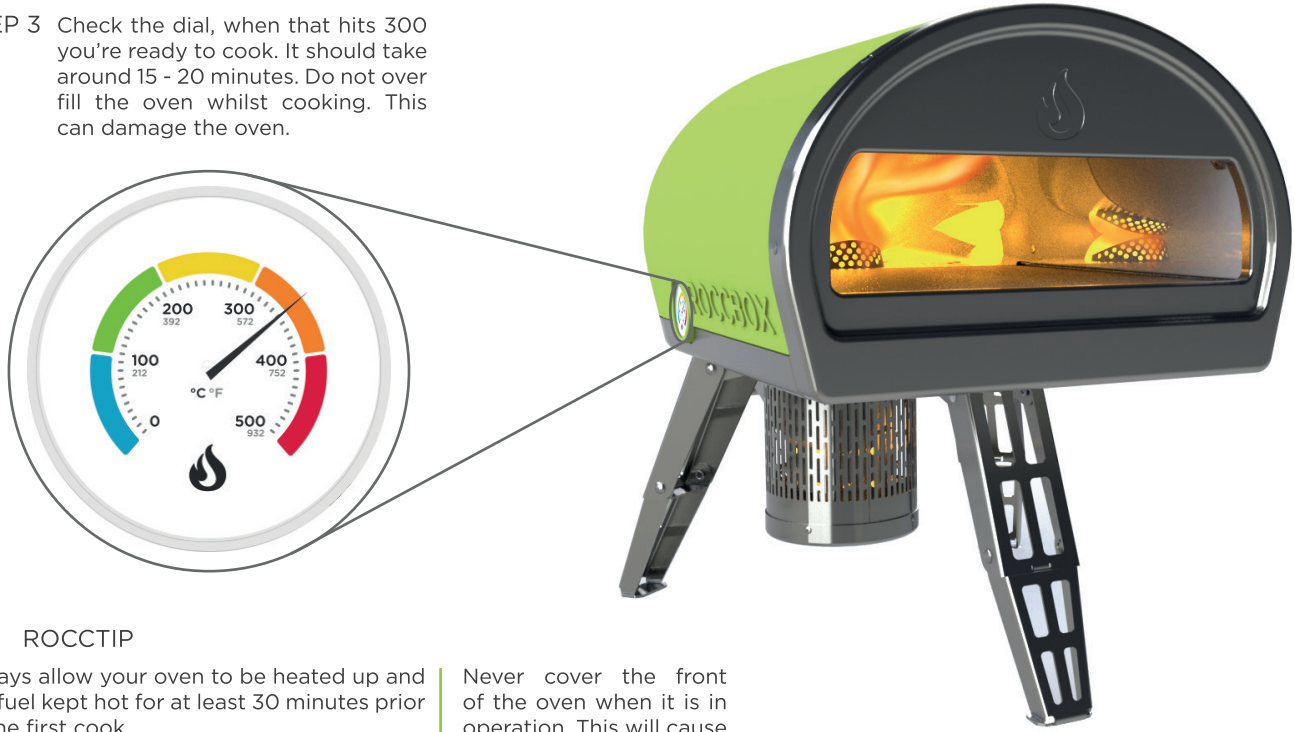

ROCCTIP

Always allow your oven to be heated up and the fuel kept hot for at least 30 minutes prior to the first cook.

Never cover the front of the oven when it is in operation. This will cause damage to the oven.

Roccbox User Manual Book.indb 25 07/03/2017 14:17:38

CLEANING & MAINTENANCE

Put those Marigolds down! The Roccbox doesn't need cleaning, it gets so darn hot that it incinerates every little bit of grime during the next firing.

You will, however, need to keep the burner clean of food debris so that it can run at optimum efficiency. Use compressed gas or a brush to clean around the top of the burner. use warm soapy water for the oven outer.

Store Roccbox in its upright position in a dry and secure place that protects it from the elements.

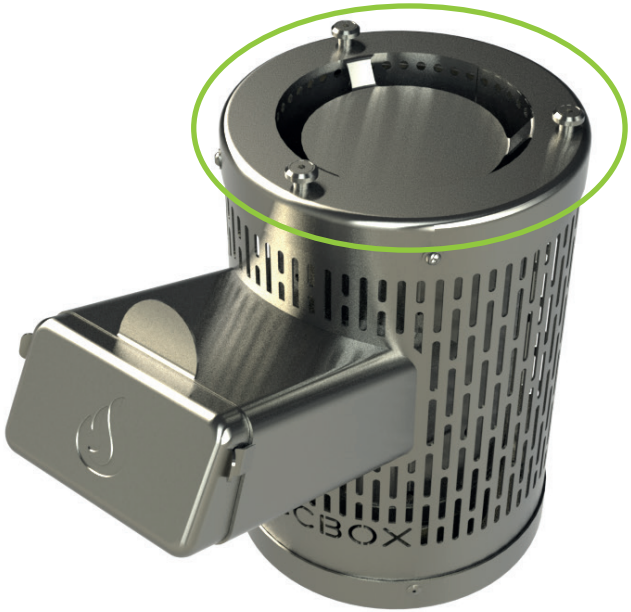

Roccbox User Manual Book.indb 26 07/03/2017 14:17:38

DISPOSAL OF ASH

Even if it's been over 24 hours since firing, the ash from your oven can still be a fire risk. Ensure you wait until the oven and burner are definitely cool before attempting to remove the ash. Regardless of the exterior temperature of the wood burner, Roccbox recommends the use of protective gloves to remove the burner and place any ash in a metal bucket with a sealable lid away from combustible materials.

Wear protective gloves whilst emptying the contents of the wood burner into a fire safety bucket.

Roccbox User Manual Book.indb 27 07/03/2017 14:17:38

Roccbox User Manual Book.indb 28 07/03/2017 14:17:38

LETS COOK

Your guide to burning gas

Roccbox User Manual Book.indb 29 07/03/2017 14:17:38

SETTING UP THE GAS

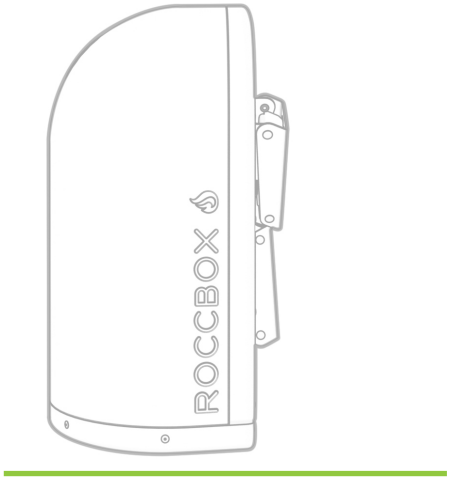

1

Place Roccbox on a flat even, surface

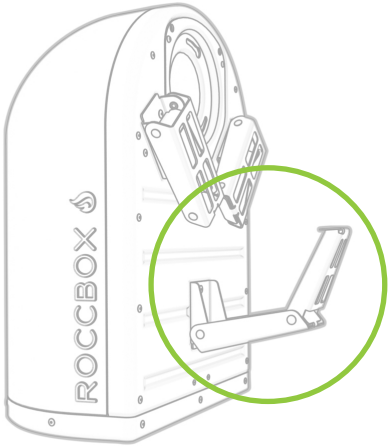

2

Unfold the legs

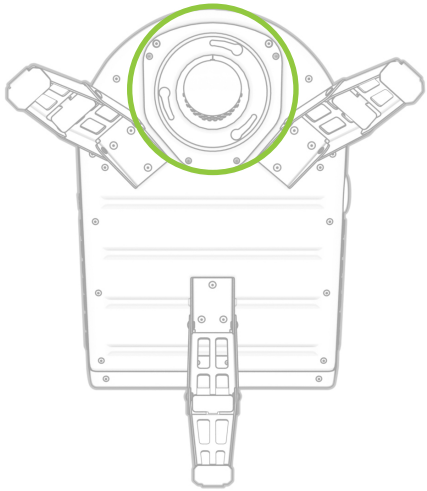

3

Bayonet fitting on Roccbox

Roccbox User Manual Book.indb 30 07/03/2017 14:17:39

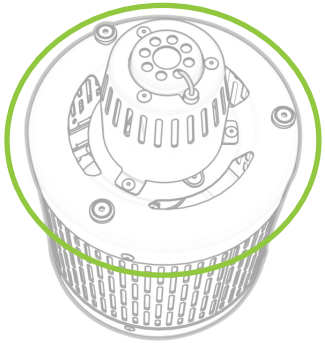

4

Bayonet fitting on Burner

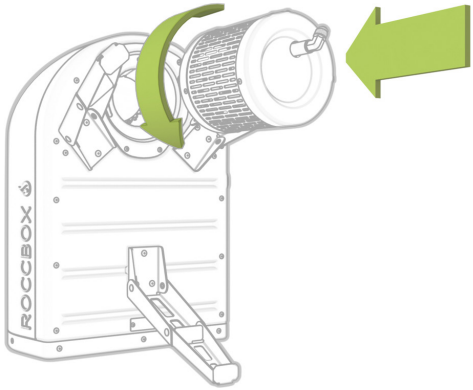

5

Push and twist anticlockwise

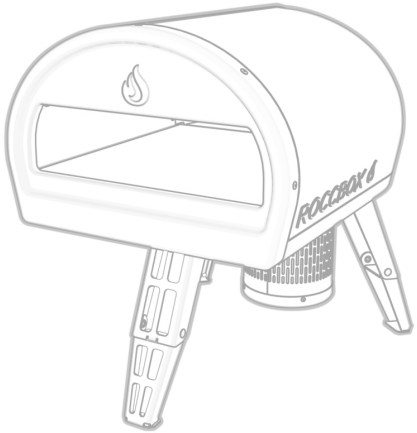

6

Done!

Roccbox User Manual Book.indb 31 07/03/2017 14:17:39

GAS SAFETY

WARNING

Prior to use, check the oven and burner and venturi for blockages (eg, food residue or insect nests - Wasps, Bees or Ants.) If an insect nest is found they can be dangerous and must be cleaned out thoroughly. Please refer to the cleaning and maintenance sections at the end of this chapter for guidance on how to do this.

Should the appliance go out for any reason, turn off the control knob and the cylinder gas valve. Wait 5 minutes before attempting to relight the appliance.

Some foods produce flammable fats and juices. Attend to an operating Roccbox at all times. Damage caused by fat and grease fires is not covered by warranty. If a grease or fat fire should occur, immediately turn off burner knob and the gas cylinder valve until the fire is out. Remove all food from the appliance.

A leak test must be carried out prior to using the appliance for the first time and whenever the gas cylinder is refilled or whenever the gas hose and regulator have been disconnected from the gas cylinder or appliance.

Roccbox User Manual Book.indb 32 07/03/2017 14:17:39

This appliance has to be installed on a secure level base prior to use.

WARNING: This appliance will become very hot, do not move it during operation.

WARNING: Keep away from children and pets.

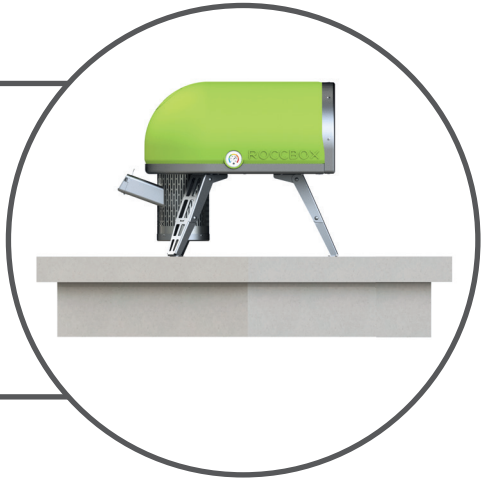

Do not store combustible material within 45cm (18inches) of the burner or mouth of the oven.

Do not use in enclosed areas. Roccbox must be used outdoors.

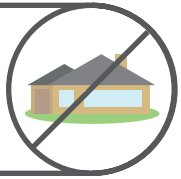

Roccbox User Manual Book.indb 33 07/03/2017 14:17:39

GAS SAFETY

WARNING

Please take a moment to review all of the safety requirements before operating the appliance when using gas.

Do not disconnect any gas fittings while the appliance is operating.

Check all gas hose lines and connections for cuts, cracks and other damage.

Gas cylinders must not be stored in enclosed areas.

Keep the fuel supply hose away from heated surfaces or direct sunlight

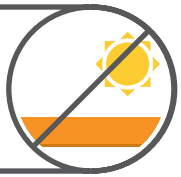

Roccbox User Manual Book.indb 34 07/03/2017 14:17:39

Do not use any additional flammable substance whilst operating with gas.

A regulator which complies with EN16129 must be fit between the gas canister and the oven.

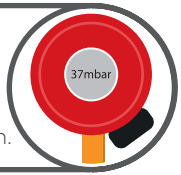

Maximum length of hose cannot exceed 1.5m. In Finland, hose length cannot exceed 1.2m

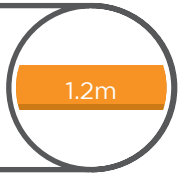

Do not touch! The Roccbox can get extremely hot when in operation. Be sure to wear protective gloves.

Do not position the gas canister under the oven.

National requirements state how often to replace the hose. Please review this for your area.

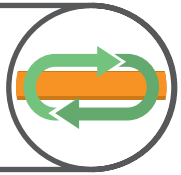

Keep the cylinder outdoors in it's upright position.

Never use a naked flame to check for gas leaks.

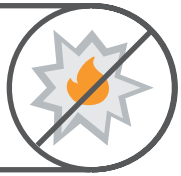

Never fill the cylinder beyond 80 percent full.

Do not connect multiple gas canisters to Roccbox or store a spare within the same vicinity

Do not use natural gas! It can damage the oven.

Make sure the flexible tube is not twisting when the appliance is in operation.

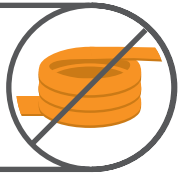

Roccbox User Manual Book.indb 35 07/03/2017 14:17:39

CONNECTING TO GAS

STEP 1 Before you begin, check that the gas you have is Propane LPG.

Minimum Propane LPG cylinder capacity for use with this appliance is 4kg / 9 lb. Maximum cylinder capacity is 9 kg / 20 lb. The gas cylinder used must incorporate a safety collar to protect the valve assembly. Do not use a rusty or dented gas cylinder or cylinder with a damaged gas valve.

For US & Canadian Customers

Gas cylinder, must be constructed and marked in accordance with the specifications for LP gas cylinders, U.S. Department of Transportation (DOT) or the Standard for Cylinders, Spheres and Tubes for the Transportation of Dangerous Goods, CAN/CSA-B339.

WARNING

If at any point you smell gas:
Shut off the gas from the canister
Turn off the switch on the Roccbox
Extinguish any open flames.
If odour continues, move away from the oven and gas supply then contact your gas supplier or fire service.

Roccbox User Manual Book.indb 36 07/03/2017 14:17:39

STEP 2 Ensure that the Roccbox is off by twisting the nob clockwise until it clicks. The handle should be vertical.

The hose should already be connected to the Roccbox however if you want to change the regulator simply turn the nut anti- clockwise and remove the hose.

When reattaching the hose turn the nut clockwise whilst holding the hose to allow a uniformed fit. Use a spanner to tighten.

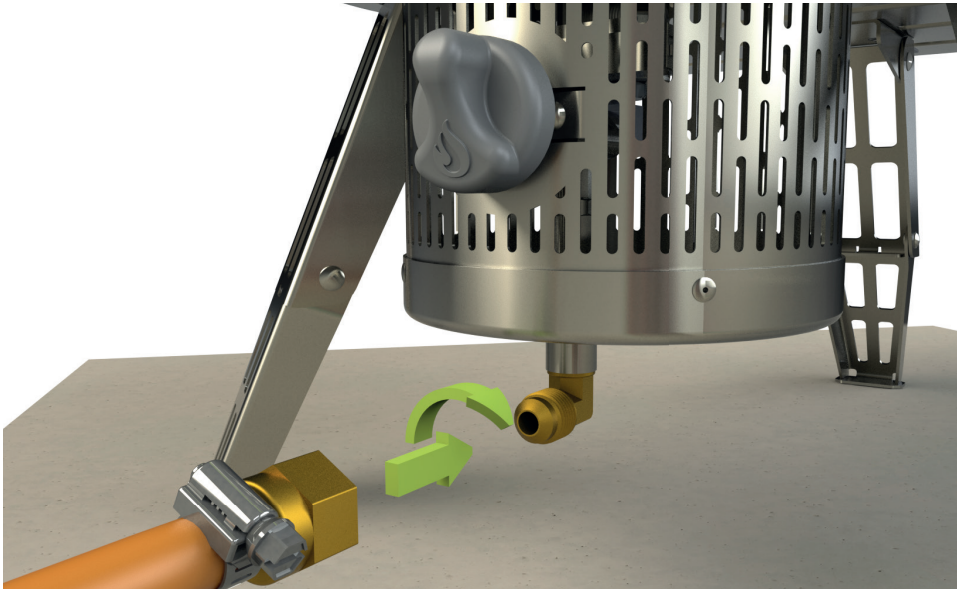

WARNING

It is recommended that you replace the hose every 5 years. Some countries may have different requirements, therefore you must adhere to their specified time period. Do not connect the regulator to the canister first!

Gas regulator supplied may not be suitable for use in your territory or region, please refer to your local regulations for more information.

Roccbox User Manual Book.indb 37 07/03/2017 14:17:40

CONNECTING TO GAS

STEP 3 Connect the regulator to the gas canister. Some regulators push on to the canister whilst others have a left or right hand screw thread. Take a moment to review which regulator you have and follow the instructions accordingly. Don't force the regulator as this could damage the gas bottle.

WARNING

Make sure that the LP cylinder or regulator valve is closed.

Do not store a spare LP cylinder under or near this appliance.

Roccbox User Manual Book.indb 38 07/03/2017 14:17:40

PUSH FIT GAS REGULATOR

Push fit gas regulator. Make sure the black switch is in the horizontal position so that the black button below it can be pressed. Whilst holding the black button, carefully align the gas valve with the regulator and push it down to lock it in place.

ANTICLOCKWISE GAS REGULATOR

Screw thread gas regulator. Ensure the gas is turned off on the bottle by twisting the handle anticlockwise. Whilst aligning the regulator with the gas bottle, twist the handle and ensure a tight fit has been made.

CLOCKWISE GAS REGULATOR

Screw thread gas regulator. Ensure the gas is turned off on the bottle by twisting the handle clockwise. Whilst aligning the regulator with the gas bottle twist the handle and ensure a tight fit has been made.

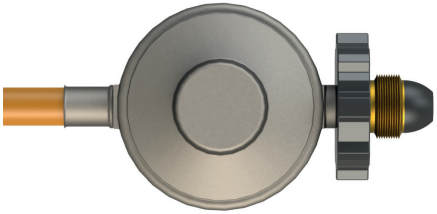

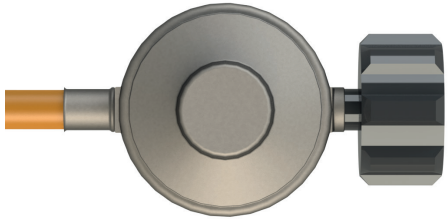

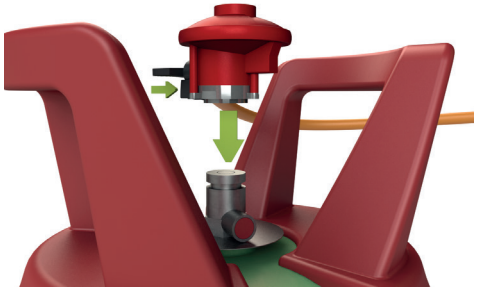

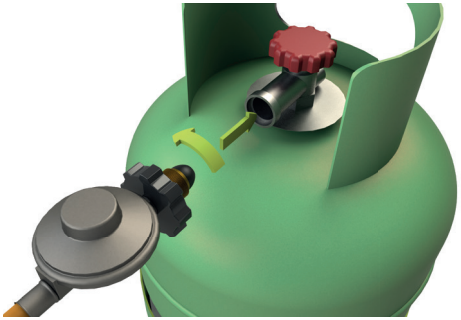

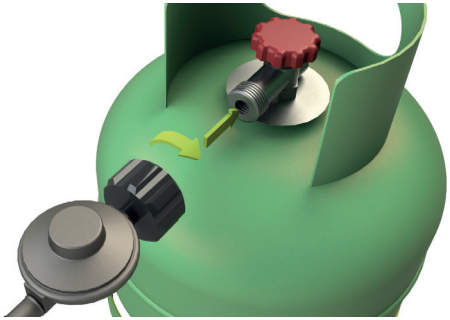

Roccbox User Manual Book.indb 39 07/03/2017 14:17:41

CONNECTING TO GAS

STEP 4 Now turn the gas on at the canister. For screw thread regulators, push down and turn the handle at the top of the canister anticlockwise.

For push fit regulators turn the handle on the side of the regulator. Inspect the fittings and pipes for fizzing of gas.

Warning: Keep the fuel supply hose away from any heated surfaces.

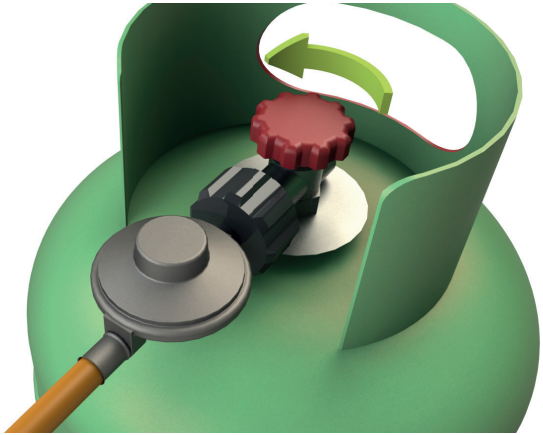

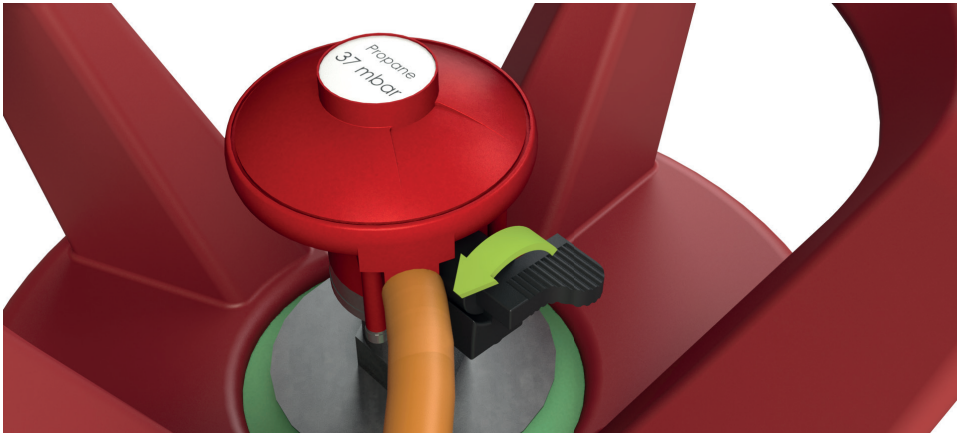

Roccbox User Manual Book.indb 40 07/03/2017 14:17:41

WARNING

You should check for gas leaks every time you disconnect and reconnect a gas fitting.

Do not ignite burners when leak checking.

Do not use an open flame to check for gas leaks. Do not create sparks or have open flames in the area whilst changing gas supply.

The changing of gas canisters must be carried out away from any sources of ignition.

Roccbox User Manual Book.indb 41 07/03/2017 14:17:41

GAS LEAKS

STEP 1 To test for gas leaks, apply a mixture of soapy water to these highlighted areas.

STEP 2 Before turning the gas supply on, get a brush and some soapy water. This will be used to detect any leaks within the fittings. Spread the water and soap over the connection points as well as any areas that show cracks on the piping.

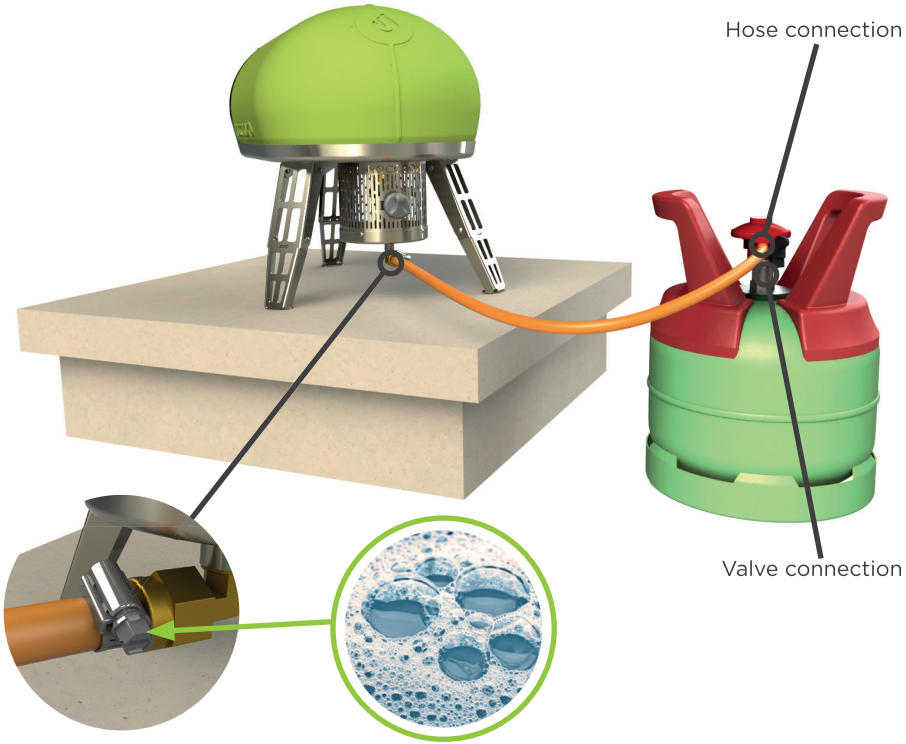

Roccbox User Manual Book.indb 42
07/03/2017 14:17:42

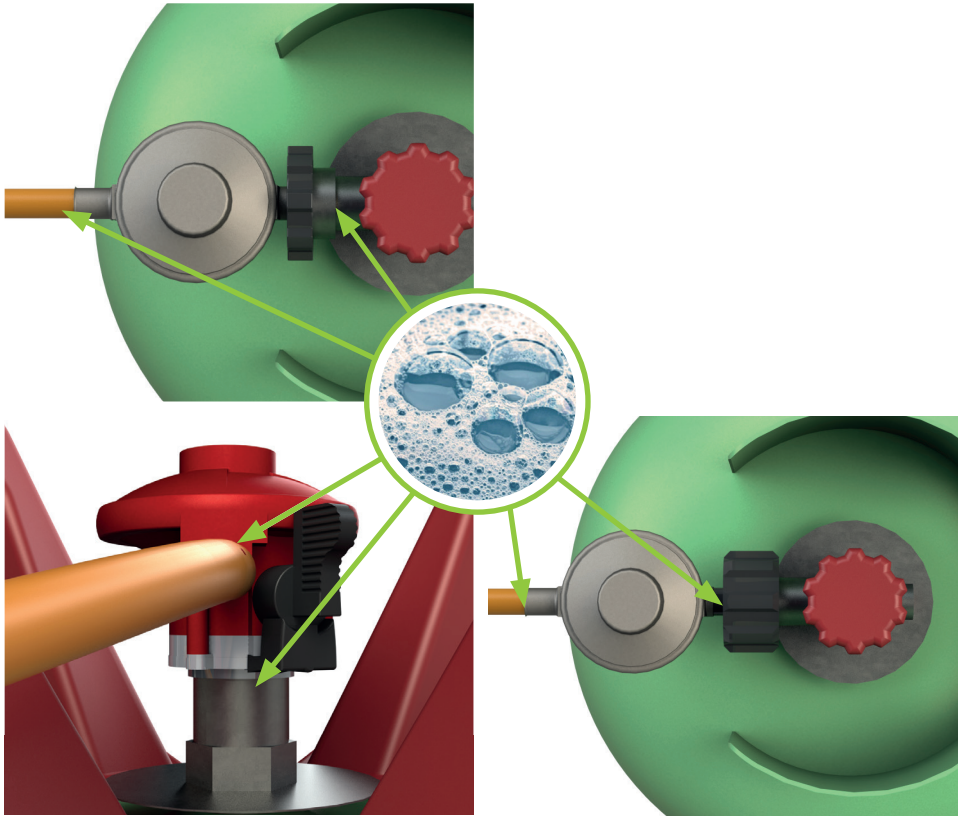

WARNING

If there is a leak at the Roccbox connection, re-tighten the fitting with a spanner and recheck for leaks with soap-and-water solution. If a leak persists after re-tightening the fitting, turn off the gas. DO NOT OPERATE THE OVEN.

If there is a leak at the Valve connection, remove LP cylinder. Do not operate barbecue. Use a different LP cylinder and recheck for leaks with soap-and-water solution.

Roccbox User Manual Book.indb 43 07/03/2017 14:17:42

DISCONNECTING GAS

STEP 1 After cooking, be sure to turn off the gas from the gas canister before turning off Roccbox. This will allow any gas left in the burner or pipe to be used up safely.

STEP 2 Wait a couple of minutes and then it will be safe to turn off your Roccbox and unplug the gas canister.

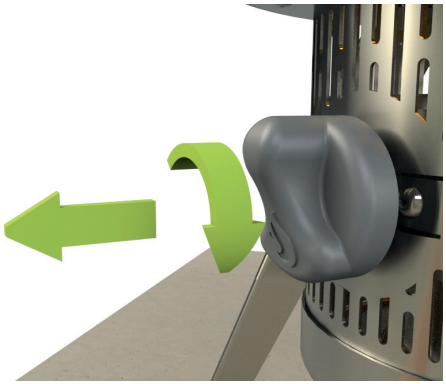

STEP 3 To detach the gas regulator from the burner simply push in the black button on the side and lift off. The regulator has to be in the off position first.

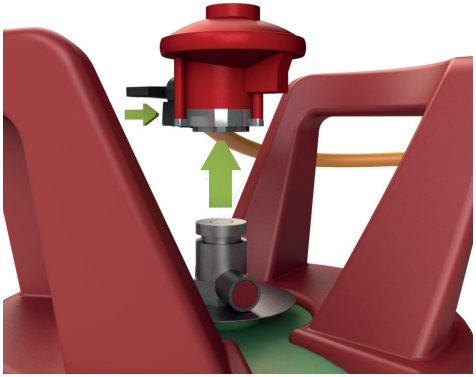

Roccbox User Manual Book.indb 44 07/03/2017 14:17:43

STEP 1 After cooking, be sure to turn off the gas from the gas canister by pushing down and turning clockwise until it is either tight and aligned in the off position.

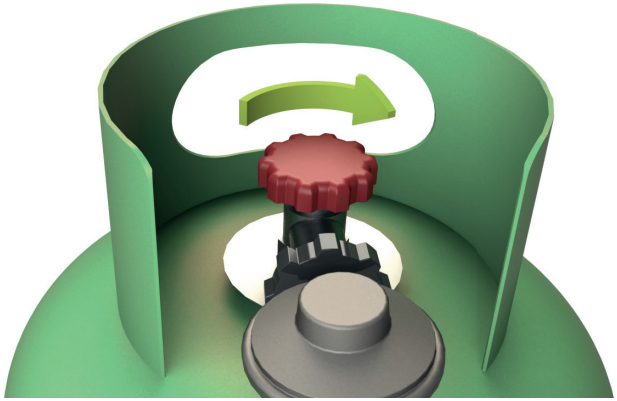

STEP 2 Wait a couple of minutes and then it will be safe to turn off your Roccbox and unplug the gas canister.

Then turn the burner off by pushing in the knob and turning clockwise until it is in the vertical position.

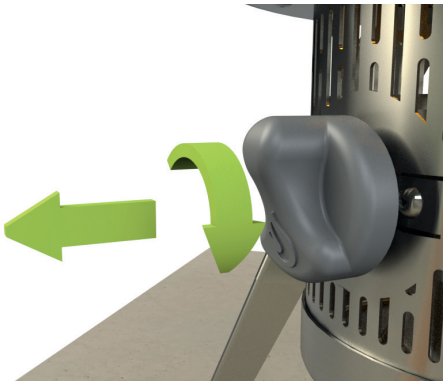

STEP 3 Depending on your gas regulator valve, either rotate it clockwise or anticlockwise to detach it from the gas canister.

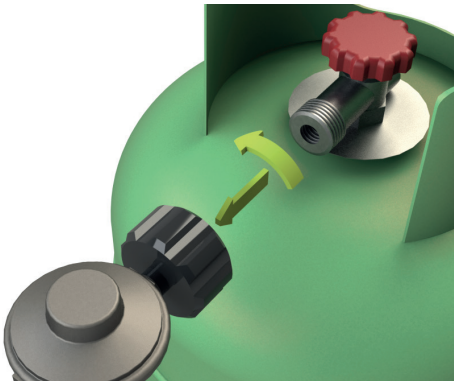

Roccbox User Manual Book.indb 45 07/03/2017 14:17:43

FIRST FIRING

STEP 1 If there are no issues with the gas leaking. Go a head and turn your Roccbox on! Push the switch and turn anticlockwise.

If there are issues with the gas leaking try reattaching the hose pipe and inspect areas for bubbles.

If the burner doesn't light, wait 5 minutes before trying again. If the problem persists contact the Roccbox for further support.

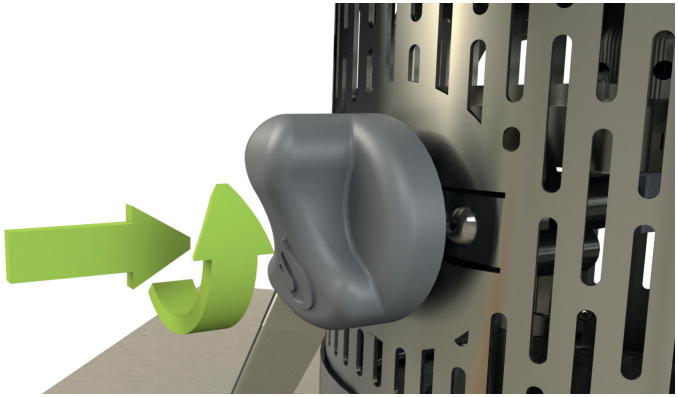

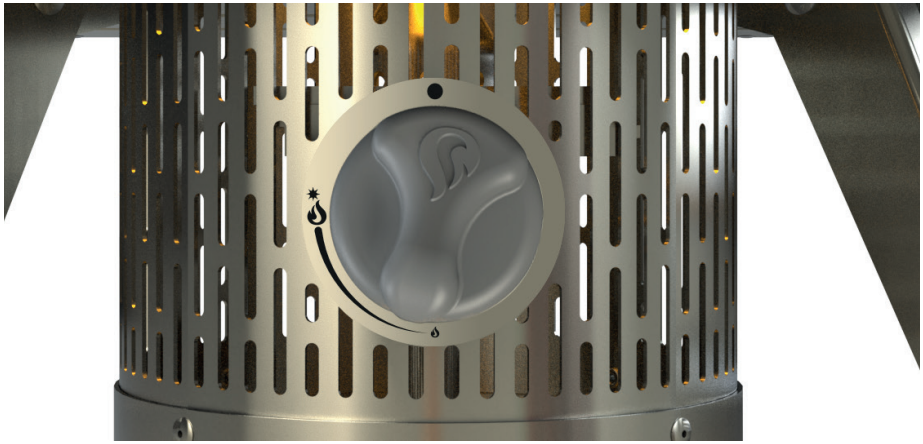

ROCCTIP

For the first firing after purchasing we highly recommend firing the oven at it's lowest temperature for 30 minutes before setting it to high flame this will help cure the oven.

Roccbox User Manual Book.indb 46 07/03/2017 14:17:44

STEP 2 Check the dial, when that hits 300 you're ready to cook. It should take around 15 - 20 minutes to reach that temperature. Don't over fill the oven as this could be dangerous.

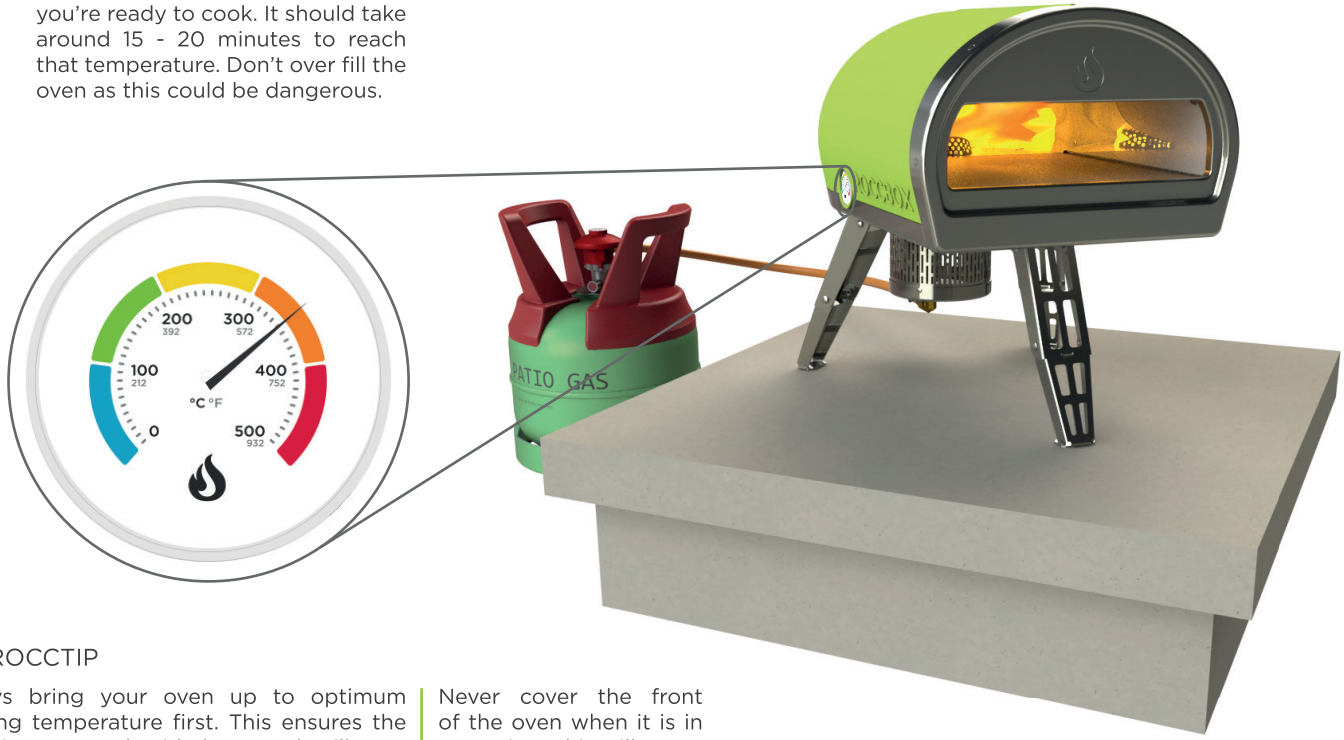

ROCCTIP

Always bring your oven up to optimum cooking temperature first. This ensures the oven is saturated with heat and will stay hotter for longer.

Never cover the front of the oven when it is in operation. This will cause damage to the oven.

Roccbox User Manual Book.indb 47 07/03/2017 14:17:44

CLEANING & MAINTENANCE

Put those Marigolds down! The Roccbox doesn't need cleaning, it gets so darn hot that it incinerates every little bit of grime during the next firing.

You will, however, need to keep the burner clean of food debris so that it can run at optimum efficiency. We recommend cleaning and inspection of the gas burner every time you go to use it. To do this simply detach the burner once it has cooled and use a brush and can of compressed air to clean it out.

For general cleaning; all you have to do is wipe down the outside with some warm soapy water. The same goes for the burner as well, just empty it of ash first.

Protect Roccbox from the adverse weather. Including rain and high winds.

No chemicals.
No abrasive methods.
No fuss.

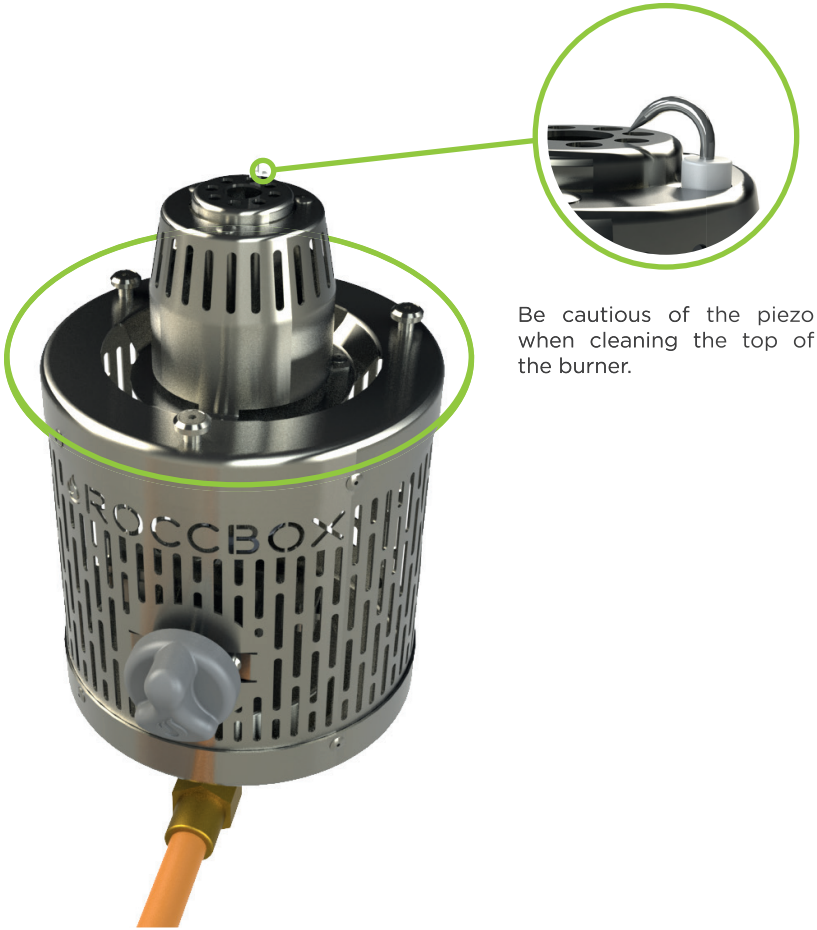

Be cautious of the piezo when cleaning the top of the burner.

Roccbox User Manual Book.indb 48
07/03/2017 14:17:44

STORAGE

Don’t leave your Roccbox outside to be exposed to the elements. Treat it with some respect and store it in its upright position some where dry and secure.

However don’t store your gas canisters in enclosed areas or in rooms below ground level.

Roccbox User Manual Book.indb 49 07/03/2017 14:17:44

OVEN WARRANTY

Who is covered by this warranty?

This limited warranty is non-transferable and applied only to the original end user purchaser. An original or copy of a sales receipt from the original sales retailer is required as proof of purchase to seek warranty service.

What is covered by this warranty?

Roccbox Ltd. (Roccbox) warrants that Roccbox Products (the “Product”) will be free from defects in workmanship and materials under normal use for a period of one (1) year from the original purchase date (“Limited Warranty Period”).

What is not covered by this warranty?

This limited warranty does not cover any damage or malfunction arising from: Normal wear and tear of Product use, any and all commercial use of the Product (the Product being for domestic use only), misuse, lack of care, mishandling, accident, abuse or other abnormal use. Use of the Product other than for its intended purpose. Damage caused by improper or unauthorized repair or maintenance. Product that has been modified or altered. Any product that is not manufactured by Roccbox (including, without limitation, any non-Roccbox product that is used in connection with the product). Products purchased from Non-Authorised retail outlets, including third party merchants on online marketplaces such as Amazon.com and ebay.com.

How to make a warranty claim with Roccbox.

All warranty claims must be made directly to Roccbox. All returned products must be returned within the Limited Warranty Period and include a completed Roccbox issued WCF (Warranty Claim Form). To obtain a WCF, a request for one must be submitted directly to Roccbox’s customer service department at support@roccbox.com (and including in the subject line: Warranty Claim) during the Limited Warranty Period explaining the defect in the Product. You must include the original or copy of a sales receipt for the returned product. Incomplete returns will not be accepted. Once Roccbox receives your returned Product, Roccbox will evaluate your claim (typically within 7-10 business days) to determine whether the returned Product does not conform to this Limited Warranty. If Roccbox determines that there is no trouble found with your returned Product or the returned Product does not qualify for warranty service, Roccbox will ship the Product back to you, at Roccbox’s expense. If Roccbox determines that there is a warranted defect in the Product, Roccbox will, at it’s option, remedy the defect as set forth below in the limited warranty. Roccbox is not liable for Products that are damaged or lost in transit to Roccbox. We recommend that you ship your returned products to Roccbox via a traceable shipment method. You are responsible for custom fees, including, but not limited to, taxes, duties and brokerage.

Roccbox User Manual Book.indb 50 07/03/2017 14:17:44

Sole and exclusive remedy.

Your sole and exclusive remedy for a breach of this limited warranty, and Roccbox's sole and entire liability is, at Roccbox's option, to repair or replace the defective product. Repair or replacement (including parts and labour and shipping costs) shall be made at Roccbox's expense. Roccbox reserves the right to send you a replacement product that is the same or of a similar style or a substitute equivalent that may not be of like kind (depending on availability). Replacement products will be furnished only on an exchange basis. Replacement products are warranted as above for the remainder of the original applicable Product warranty period.

Warranty disclaimers

Except as expressly set forth above in this limited warranty, Roccbox makes no other express or implied warranties to the extent permitted by law. The duration of any implied warranties is limited to the durations set forth in this limited warranty. Some jurisdictions do not allow the exclusion of implied warranties or limitations on how long an implied warranty may last, so such limitations or exclusions may not apply to you. This warranty gives you specific legal rights and you may also have other rights which vary from jurisdiction to jurisdiction. Limitation of liability in no event shall Roccbox or its suppliers be liable to you or any third party for any indirect, incidental, consequential, special or exemplary damages arising our of the use of the Product, including, without limitation, property damage, loss of value of the Product or any third party products that are used in or with the product, or loss of use of the Product or any third party products that are used in or with the Product, even if Roccbox has been advised of the possibility of such damages.

Notwithstanding any damages that you might incur for any reason whatsoever (including, without limitation, all damages referenced herein and all direct or general damages in contract, tort (including negligence) or otherwise), the entire liability of Roccbox and any of its suppliers shall be limited to the amount actually paid by you for the product.

Some territories and / or jurisdictions do not allow the exclusion or limitation of incidental or consequential damages, so the above limitations or exclusions may not apply to you.

The warranty gives you specific legal rights. You may also have other rights that vary from territory to territory.

Roccbox User Manual Book.indb 51 07/03/2017 14:17:44

REGULATORY COMPLIANCE

EU DECLARATION OF CONFORMITY

Manufacturer's Name: Roccbox Limited
Manufacturer's Address: Units 18 & 19, Radar way, Christchurch, Dorset, BH23 4FL UK.

Herewith declare that this product

Product: Roccbox oven
Model(s) / Type(s): RBX1 - 2016
Trade name: Roccbox

Is in conformity with the following EC directives:

- Gas Appliance Directive (2009/142/EC)

and that the following harmonized standards have been applied:
EN 498:2012[E] & EN1860:2013
The Notified Body who has performed EC Type Examination: EC Type Examination Certificate: 0845CR0004
Notified Body: Danish Institute of Fire and Security Technology
Notified Body no.: 0845

END OF LIFE

At products end of life, please dispose responsibly,

Roccbox User Manual Book.indb 52 07/03/2017 14:17:45

GENERAL ADVICE

The Roccbox gets extremely hot and should not be used by children. Do not allow children near the device during or after operation. Roccbox can stay hot for a few hours after use.

Do not use under any apartment or condominium balcony or deck.

Roccbox is not intended for and should never be used as a heater.

Roccbox has not been designed or intended to be used on a boat or within a recreational vehicle or any other form of confined area.

Assembly and operation of the oven should be carried out by a competent person.
The use of alcohol, prescription or non-prescription drugs may impair the consumers ability to assemble or operate the device safely.

Do not use any plastic or glass utensils within the Roccbox

Use heat-resistant gloves when operating the oven.

Do not insert items into Roccbox that are bigger than the dimensions of the oven mouth.

Do not over fill the Roccbox or cover the burner.

Do not move the Roccbox whilst in operation

Do not operate the Roccbox in strong winds. Winds can extinguish the flame and also cause irregular air pressure resulting in the flame and heat coming out the back of the Roccbox. Use a wind break in open areas but keeping over 45cm away from the device.

Do not pour water on to the cooking stone as this will likely crack it and could be dangerous because of oil and grease.

Do not wear loose flammable clothing or sleeves near the Roccbox.

Never cover the oven mouth whilst it is in operation. This will damage the oven.

Parts sealed by the manufacturer or the agent shall not be manipulated by the user.

Roccbox User Manual Book.indb 53 07/03/2017 14:17:45

SAFE SETUP

The Roccbox should only be used outside in a well ventilated area. Do not use within areas that do not provide sufficient ventilation to the burners.

Do not use within a tent or under a marquee.

Roccbox is not suitable for use within recreational vehicles or other mobile transport. Do not use the oven in the boot of any vehicle, or inside an estate car, people carrier, minibus or caravan.

Set the Roccbox up on a level, non-combustible surface that is clear of debris and combustible material.

Inspect all equipment for damage such as rust or insect habitation as this will prohibit efficiency and can be dangerous.

Do not attempt to use any of the burners with any other non-Roccbox products. This will void your warranty.

Do not use any non-Roccbox burners or non approved 3rd party burners for firing the oven.

Do not remove any of the burners whilst they are in use.

Do not use the gas appliance of Roccbox on enclosed or small balconies.

Roccbox User Manual Book.indb 54 07/03/2017 14:17:45

SAFE OPERATION WITH WOOD

Before using wood appliances check all components for damage such as loose fittings, rust and insect infestation. Make sure the burner is securely fitted before operating the oven.

Do not use barbecue coals.

Do not use treated timber that has been painted or stained.

Do not use wood that you are unsure of its origin

Do not use soft wood such as pine or freshly cut green wood from trees. This will damage the Roccbox due to its sappy nature.

Do not store combustible materials within 45cm (18 inches) of the burner and oven mouth.

Using hard woods such as oak, ash and beech are ideal for use within the burner.

Do not use flammable substances in the oven mouth or try to insert highly flammable liquids into the burner whilst in operation.

Use heat-resistant gloves when operating the oven. The wood burner tray can become especially hot.

Roccbox User Manual Book.indb 55 07/03/2017 14:17:45

SAFE OPERATION WITH GAS

Before using gas appliances check all components for damage such as cracks within the hose line, loose fittings, rust and insect infestation.

Tighten all gas fittings with a spanner. Don't over tighten the joints.

Check all gas equipment for leaks with soapy water before using the oven. Never check leaks with a naked flame!

Do not connect multiple gas canisters to Roccbox or store a spare within the same vicinity as the oven.

Under no circumstances should you attempt to disconnect the gas regulator or any gas fitting while your oven is in operation

Keep all electrical appliances away from the oven and gas supply at all times.

Do not smoke around the oven or gas supply.
A regulator must always be used for the gas supply.

Do not store gas cylinders in enclosed areas or below ground level.

Always keep gas cylinders outdoors in an upright position.

Do not use multiple canisters to fuel the oven.

We recommend that you only use LPG Gas with the Roccbox oven.

Do not use natural gas or try to fill LPG canisters with natural gas.

Do not use additional flammable substances within the oven mouth

Do not cover the burner of block the burner with food debris.

Make sure the gas hose is not twisted when the appliance is in operation.

Roccbox User Manual Book.indb 56 07/03/2017 14:17:45